INSTRUCTION MANUAL

FLEXCUT® 35

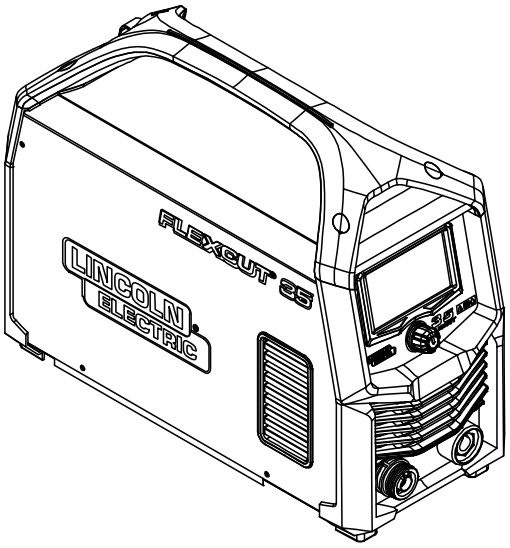

For use with Product/Code Numbers:

13784, 13930, 14053, 14085, 50748

Save for future reference

Date Purchased

Code: (ex: 10859)

Serial: (ex: U1060512345)

IM10740-A | Issue Date Jul - 2026
© Lincoln Global, Inc. All Rights Reserved.

THE LINCOLN ELECTRIC COMPANY
22801 St. Clair Avenue • Cleveland, OH • 44117-1199 • U.S.A.
www.lincolnelectric.com

Contents

WEEE xi
ECO DESIGN INFORMATION FOR EU MACHINE WITH CE MARK xii
ELECTROMAGNETIC COMPATIBILITY (EMC) xiv

INSTALLATION ..... SECTION A
FLEXCUT 35 - TECHNICAL SPECIFICATION A-1
FLEXCUT® 35 CE - TECHNICAL SPECIFICATIONS A-2
GENERAL DESCRIPTION A-3
SPECIFIC HAZARD STATEMENTS A-3
SELECT PROPER LOCATION A-3
ENVIRONMENTAL LIMITATIONS A-3
STACKING A-3
TILTING A-3
HIGH FREQUENCY INTERFERENCE PROTECTION A-4
INPUT ELECTRICAL CONNECTIONS A-4
GAS INPUT CONNECTIONS A-4
OUTPUT CONNECTIONS A-5

OPERATION ..... SECTION B
SPECIFIC HAZARD STATEMENTS B-1
PREHEAT TEMPERATURE FOR PLASMA CUTTING B-1
USER RESPONSIBILITY B-1
DESIGN FEATURES AND ADVANTAGES B-1
CUTTING CAPABILITY B-2
CAPACITIES B-2
LIMITATIONS B-2
MACHINE SYMBOLOGY B-2
CONTROLS AND SETTINGS B-3
HAND CUTTING B-7
CUT QUALITY B-9

ACCESSORIES AND OPTIONS ..... SECTION C
ACCESSORIES AND OPTIONS C-1

MAINTENANCE ..... SECTION D
CONSUMABLE LIFE D-1
INSPECTION OF CONSUMABLE PARTS D-1

TROUBLESHOOTING ..... SECTION E
HOW TO USE TROUBLESHOOTING GUIDE E-1
TROUBLESHOOTING GUIDE E-1
ERROR CODES E-3
WIRING DIAGRAMS
CUSTOMER ASSISTANCE POLICY

SAFETY INFORMATION

SAFETY DEPENDS ON YOU

Lincoln welding, cutting, and heating equipment is designed and built with safety in mind. However, your overall safety can be increased by proper installation and thoughtful operation on your part. DO NOT INSTALL, OPERATE OR REPAIR THIS EQUIPMENT WITHOUT READING THIS MANUAL AND THE SAFETY PRECAUTIONS CONTAINED THROUGHOUT. And, most importantly, think before you act and be careful.

⚠ DANGER

This statement indicates an imminently hazardous situation which, if not avoided, will result in death or serious injury.

⚠ WARNING

This statement indicates a potentially hazardous situation which, if not avoided, could result in death or serious injury.

⚠ CAUTION

This statement indicates a potentially hazardous situation which, if not avoided, could result in minor or moderate injury.

Notice: This statement indicates the possibility of damage to equipment if the potential risk is not avoided.

PLEASE EXAMINE CARTON AND EQUIPMENT FOR DAMAGE IMMEDIATELY

When this equipment is shipped, title passes to the purchaser upon receipt by the carrier. Consequently, claims for material damaged in shipment must be made by the purchaser against the transportation company at the time the shipment is received.

KEEP YOUR HEAD OUT OF THE FUMES

- **DON'T** get too close to the weld. Use corrective lenses if necessary to stay a reasonable distance away from the weld.
- **USE ENOUGH VENTILATION** or exhaust at the weld, or both, to keep the fumes and gases from your breathing zone and the general area.
- **IN A LARGE ROOM OR OUTDOORS** , natural ventilation may be adequate if you keep your head out of the fumes.
- **USE NATURAL DRAFTS** or fans to keep the fumes away from your face.
- **READ** and obey the Safety Data Sheet (SDS) and the warning label that appears on all containers of welding materials.

If you develop unusual symptoms, see your supervisor. Perhaps the welding atmosphere and ventilation system should be checked.

WEAR CORRECT EYE, EAR AND BODY PROTECTION

- **PROTECT** your eyes and face with properly fitted and with proper grade of filter plate (See ANSI Z49.1).
- **PROTECT** your body from welding spatter and arc flash with protective clothing including woolen clothing, flame-proof apron and gloves, leather leggings, and high boots.
- **PROTECT** others from spatter, flash, and glare with protective screens or barriers.
- **PROTECT** your eyes and face with welding helmet
- **IN SOME AREAS**, protection from noise may be appropriate.
- **BE SURE** protective equipment is in good condition.

- **AT ALL TIMES**, wear safety glasses in work area.
- **DO NOT WELD, CUT, OR HEAT** containers or materials which previously had been in contact with hazardous substances unless they are properly cleaned. This is extremely dangerous.

- **DO NOT WELD, CUT, OR HEAT** painted or plated parts unless special precautions with ventilation have been taken. They can release highly toxic fumes or gases.
- **PROTECT** compressed gas cylinders from excessive heat, mechanical shocks, and arcs; fasten cylinders so they cannot fall.
- **BE SURE** cylinders are never grounded or part of an electrical circuit.
- **REMOVE** all potential fire hazards from welding area.

- **ALWAYS HAVE FIRE FIGHTING EQUIPMENT READY FOR IMMEDIATE USE AND KNOW HOW TO USE IT.**

CALIFORNIA PROPOSITION 65 WARNINGS

⚠ WARNING

Breathing diesel engine exhaust exposes you to chemicals known to the State of California to cause cancer and birth defects, or other reproductive harm.

Always start and operate the engine in a well-ventilated area.

If in an exposed area, vent the exhaust to the outside.

Do not modify or tamper with the exhaust system.

Do not idle the engine except as necessary.

⚠ WARNING

This product, when used for welding or cutting, produces fumes or gases which contain chemicals known to the State of California to cause birth defects and, in some cases, cancer. (California Health & Safety Code § 25249.5 et seq.)

For more information go to https://www.p65warnings.ca.gov

ARC WELDING CAN BE HAZARDOUS

PROTECT YOURSELF AND OTHERS FROM POSSIBLE SERIOUS INJURY OR DEATH. KEEP CHILDREN AWAY. PACEMAKER WEARERS SHOULD CONSULT WITH THEIR DOCTOR BEFORE OPERATING.

Read and understand the following safety highlights. For additional safety information, it is strongly recommended that you purchase a copy of “Safety in Welding & Cutting - ANSI Standard Z49.1” from the American Welding Society, P.O. Box 351040, Miami, Florida 33135 or CSA Standard W117.2. A Free copy of “Arc Welding Safety” booklet E205 is available from the Lincoln Electric Company, 22801 St. Clair Avenue, Cleveland, Ohio 44117-1199.

BE SURE THAT ALL INSTALLATION, OPERATION, MAINTENANCE AND REPAIR PROCEDURES ARE PERFORMED ONLY BY QUALIFIED INDIVIDUALS.

FOR ENGINE POWERED EQUIPMENT

- Turn the engine off before troubleshooting and maintenance work unless the maintenance work requires it to be running.

- Do not add the fuel near an open flame welding arc or when the engine is running. Stop the engine and allow it to cool before refueling to prevent spilled fuel from vaporizing on contact with hot engine parts and igniting. Do not spill fuel when filling tank. If fuel is spilled, wipe it up and do not start engine until fumes have been eliminated.

- Keep all equipment safety guards, covers and devices in position and in good repair. Keep hands, hair, clothing and tools away from V-belts, gears, fans and all other moving parts when starting, operating or repairing equipment.

- In some cases it may be necessary to remove safety guards to perform required maintenance. **REMOVE GUARDS ONLY** when necessary and replace them when the maintenance requiring their removal is complete. Always use the greatest care when working near moving parts.
- **DO NOT** put your hands near the engine fan. Do not attempt to override the governor or idler by pushing on the throttle control rods while the engine is running.
- To prevent accidentally starting gasoline engines while turning the engine or welding generator during maintenance work, disconnect the spark plug wires, distributor cap or magneto wire as appropriate.

- To avoid scalding, do not remove the radiator pressure cap when the engine is hot.

- Generator exhaust contains carbon monoxide. This is a poison you cannot see or smell.
- Using a generator indoors **CAN KILL YOU IN MINUTES**.
- **NEVER** use inside a home or garage, EVEN IF doors and windows are open.

- **ONLY** use **OUTSIDE** and far away from windows, doors and vents.
- Avoid other generator hazards. **READ MANUAL BEFORE USE**.

ELECTRIC AND MAGNETIC FIELDS MAY BE DANGEROUS

- Electric current flowing through any conductor causes localized Electric and Magnetic Fields (EMF). Welding and heating current creates EMF fields around cables and equipment.
- EMF fields may interfere with some pacemakers, and welders having a pacemaker should consult their physician before welding.
- Exposure to EMF fields in welding may have other health effects which are now not known.

All welders should use the following procedures in order to minimize exposure to EMF fields from the welding circuit:

- Route the electrode and work cables together - Secure them with tape when possible.
- Never coil the electrode lead around your body.
- Do not place your body between the electrode and work cables. If the electrode cable is on your right side, the work cable should also be on your right side.
- Connect the work cable to the workpiece as close as possible to the area being welded.
- Do not work next to welding power source.

ELECTRIC SHOCK CAN KILL

- The electrode and work (or ground) circuits are electrically “hot” when the welder is on. Do not touch these “hot” parts with your bare skin or wet clothing. Wear dry, hole-free gloves to insulate hands.
- Insulate yourself from work and ground using dry insulation. Make certain the insulation is large enough to cover your full area of physical contact with work and ground.

In addition to the normal safety precautions, if welding must be performed under electrically hazardous conditions (in damp locations or while wearing wet clothing; on metal structures such as floors, gratings or scaffolds; when in cramped positions such as sitting, kneeling or lying, if there is a high risk of unavoidable or accidental contact with the workpiece or ground) use the following equipment:

- Semiautomatic DC Constant Voltage (Wire) Welder.
- DC Manual (Stick) Welder.
- AC Welder with Reduced Voltage Control.
- In semiautomatic or automatic wire welding, the electrode, electrode reel, welding head, nozzle or semiautomatic welding gun are also electrically “hot”.
- Always be sure the work cable makes a good electrical connection with the metal being welded. The connection should be as close as possible to the area being welded.
- Ground the work or metal to be welded to a good electrical (earth) ground.
- Maintain the electrode holder, work clamp, welding cable and welding machine in good, safe operating condition. Replace damaged insulation.
- Never dip the electrode in water for cooling.

- Never simultaneously touch electrically “hot” parts of electrode holders connected to two welders because voltage between the two can be the total of the open circuit voltage of both welders.
- When working above floor level, use a safety belt to protect yourself from a fall should you get a shock.
- **Also see** WELDING AND CUTTING SPARKS CAN CAUSE FIRE OR EXPLOSION **and** FOR ELECTRICALLY POWERED EQUIPMENT

ARC RAYS CAN BURN

- Use a shield with the proper filter and cover plates to protect your eyes from sparks and the rays of the arc when welding or observing open arc welding. Headshield and filter lens should conform to ANSI Z87.1 standards.
- Use suitable clothing made from durable flame-resistant material to protect your skin and that of your helpers from the arc rays.
- Protect other nearby personnel with suitable, non-flammable screening and/or warn them not to watch the arc nor expose themselves to the arc rays or to hot spatter or metal.

FUMES AND GASES CAN BE DANGEROUS

Welding may produce fumes and gases hazardous to health. Avoid breathing these fumes and gases. When welding, keep your head out of the fume. Use enough ventilation and/or exhaust at the arc to keep fumes and gases away from the breathing zone.

- **When welding hardfacing (see instructions on container or SDS) or on lead or cadmium plated steel and other metals or coatings which produce highly toxic fumes, keep exposure as low as possible and within applicable OSHA PEL and ACGIH TLV limits using local exhaust or mechanical ventilation unless exposure assessments indicate otherwise. In confined spaces or in some circumstances, outdoors, a respirator may also be required. Additional precautions are also required when welding on galvanized steel.**
- The operation of welding fume control equipment is affected by various factors including proper use and positioning of the equipment, maintenance of the equipment and the specific welding procedure and application involved. Worker exposure level should be checked upon installation and periodically thereafter to be certain it is within applicable OSHA PEL and ACGIH TLV limits.
- Do not weld in locations near chlorinated hydrocarbon vapors coming from degreasing, cleaning or spraying operations. The heat and rays of the arc can react with solvent vapors to form phosgene, a highly toxic gas, and other irritating products.
- Shielding gases used for welding can displace air and cause injury or death. Always use enough ventilation, especially in confined areas, to insure breathing air is safe.
- Read and understand the manufacturer’s instructions for this equipment and the consumables to be used, including the Safety Data Sheet (SDS) and follow your employer’s safety practices. SDS forms are available from your welding distributor or from the manufacturer.
- Also see FOR ENGINE POWERED EQUIPMENT

WELDING AND CUTTING SPARKS CAN CAUSE FIRE OR EXPLOSION

- Remove fire hazards from the welding area. If this is not possible, cover them to prevent the welding sparks from starting a fire. Remember that welding sparks and hot materials from welding can easily go through small cracks and openings to adjacent areas. Avoid welding near hydraulic lines. Have a fire extinguisher readily available.
- Where compressed gases are to be used at the job site, special precautions should be used to prevent hazardous situations. Refer to **“Safety in Welding and Cutting” (ANSI Standard Z49.1)** and the operating information for the equipment being used.

- When not welding, make certain no part of the electrode circuit is touching the work or ground. Accidental contact can cause overheating and create a fire hazard.
- Do not heat, cut or weld tanks, drums or containers until the proper steps have been taken to ensure that such procedures will not cause flammable or toxic vapors from substances inside. They can cause an explosion even though they have been “cleaned”. For information, purchase “Recommended Safe Practices for the Preparation for Welding and Cutting of Containers and Piping That Have Held Hazardous Substances”, **AWS F4.1** from the American Welding Society.
- Vent hollow castings or containers before heating, cutting or welding. They may explode.
- Sparks and spatter are thrown from the welding arc. Wear oil free protective garments such as leather gloves, heavy shirt, cuff-less trousers, high shoes and a cap over your hair. Wear ear plugs when welding out of position or in confined places. Always wear safety glasses with side shields when in a welding area.
- Connect the work cable to the work as close to the welding area as practical. Work cables connected to the building framework or other locations away from the welding area increase the possibility of the welding current passing through lifting chains, crane cables or other alternate circuits. This can create fire hazards or overheat lifting chains or cables until they fail.
- **Read and follow NFPA 51B** “Standard for Fire Prevention During Welding, Cutting and Other Hot Work”, available from NFPA, 1 Batterymarch Park, PO box 9101, Quincy, MA 022690-9101.
- **DO NOT** use a welding power source for pipe thawing.

CYLINDER MAY EXPLODE IF DAMAGED

- Use only compressed gas cylinders containing the correct shielding gas for the process used and properly operating regulators designed for the gas and pressure used. All hoses, fittings, etc. should be suitable for the application and maintained in good condition.
- Always keep cylinders in an upright position securely chained to an undercarriage or fixed support.

Cylinders should be located:

- Away from areas where they may be struck or subjected to physical damage.
- A safe distance from arc welding or cutting operations and any other source of heat, sparks, or flame.
- Never allow the electrode, electrode holder or any other electrically “hot” parts to touch a cylinder.
- Keep your head and face away from the cylinder valve outlet when opening the cylinder valve.
- Valve protection caps should always be in place and hand tight except when the cylinder is in use or connected for use.
- Read and follow the instructions on compressed gas cylinders, associated equipment, and CGA publication P-l, “Precautions for Safe Handling of Compressed Gases in Cylinders,” available from the Compressed Gas Association, 14501 George Carter Way Chantilly, VA 20151.

FOR ELECTRICALLY POWERED EQUIPMENT

- Turn off input power using the disconnect switch at the fuse box before working on the equipment.
- Install equipment in accordance with the U.S. National Electrical Code, all local codes and the manufacturer’s recommendations.
- Ground the equipment in accordance with the U.S. National Electrical Code and the manufacturer’s recommendations.

BATTERY HANDLING, STORAGE, AND DISPOSAL

Batteries can be flammable substances such as lithium or other organic solvents, which may result in overheating, rupture, or combustion. Failure to follow the battery manufactures instructions may result in fire, personal injury, and damage to property if used improperly.

- DO NOT short circuit, disassemble, deform, or heat batteries.
- DO NOT attempt to recharge batteries unless they are specifically marked as "rechargeable".
- DO NOT use or charge the battery if it appears to be leaking, deformed or damaged in any way.
- Store in a cool location. Keep batteries away from direct sunlight, high temperature, and high humidity.
- Immediately discontinue use of the battery if, while using, charging, or storing the battery, the battery emits an unusual smell, feels hot, changes color, changes shape, or appears abnormal in any other way.
- Keep batteries out of reach of children, should a child swallow a battery, consult a physician immediately.
- Recycle or dispose of batteries in accordance with local and federal laws.

FOR LASER EMITTING EQUIPMENT

- Hazardous Class 4 (IV) laser products emit invisible, infrared laser radiation which can permanently damage the eye's retina and/or cornea, burn skin, and pose a fire risk. End users shall assign a qualified Laser Safety Officer (LSO) who has the certifications required by applicable law/standards, have a documented Laser Safety Program and have a Laser Controlled Area (LCA) that confirms to ANSI Z136.1 & Z136.9.
- Do not operate laser before end user's LSO has completed a risk assessment and all the prescribed Risk Mitigations measures have been fully implemented. Ensure the laser is operated/ demonstrated safely by trained personnel and that the environment surrounding the laser welding cell or laser-controlled area is safe for people nearby when the laser is in operation.
- Never point the laser at yourself or others. Never look directly into a laser aperture, even if wearing full eye protection.
- All persons inside LCA must wear proper PPE to avoid eye or skin exposure to laser radiation. The end user's LSO shall select proper PPE including, but not limited to, heat-resistant gloves, flame-resistant clothing, laser safety eye wear and laser-safe helmets that conform to ANSI Z136.1 Optical Density requirements for the wavelength and output power of the laser in use. Standard safety glasses and welding helmets DO NOT provide adequate protection from laser beam hazards. Always inspect PPE for damage or improper fit before use.
- Only qualified persons shall install, operate or service this unit per ANSI Z136.1 standards and your LSO's instruction. Read and follow all labels and manuals before installing, operating, or servicing hand held any laser welding equipment.
- Do not operate outside of a LCA, or if the laser protective housing is modified or damaged, or if safety interlocks have been bypassed or otherwise defeated. Inspect all equipment and LCA for damage or tampering prior to use.
- Reflected beams from the laser can damage eyes and skin and can pose a fire risk. Prior to use, the LCA should be assessed by the LSO to understand the surfaces where hazardous reflected beams can exist. Never position yourself or flammable material in the anticipated laser beam path and take extra precautions when working on reflective materials like aluminum and stainless steel.
- Follow all standards, individual facility or building regulations, and national, state, and local codes.

DEALER LOCATOR & PRODUCT REGISTRATION

Register your machine:

https://www.lincolnelectric.com/register

Authorized Service and Distributor Locator:

https://www.lincolnelectric.com/locator

ADDITIONAL SAFETY INFORMATION

Refer to http://www.lincolnelectric.com/safety for additional safety information

WEEE

	Do not dispose of electrical equipment together with normal waste! In observance of European Directive 2012/19/EC on Waste Electrical and Electronic Equipment (WEEE) and its implementation in accordance with national law, electrical equipment that has reached the end of its life must be collected separately and returned to an environmentally compatible recycling facility. As the owner of the equipment, you should get information on approved collection systems from our local representative. By applying this European Directive you will protect the environment and human health!

ECO DESIGN INFORMATION FOR EU MACHINE WITH CE MARK

The equipment has been designed in order to be compliant with the Directive 2009/125/EC and the Regulation 2019/1784/EU.

Table 1 :Efficiency and idle power consumption:

Index	Name	Efficiency when max power consumption / Idle power consumption	Equivalent model
K14450-1	**FLEXCUT® 35 CE** 120V	81% / 23,7W	No equivalent model
K14450-1	**FLEXCUT® 35 CE** 230V	84% / 17,5W	No equivalent model

Table 2 :Idle state occurs under the condition specified in below table:

IDLE STATE	
Condition	**Presence**
MIG mode	
TIG mode	
STICK mode	
After 10 minutes of non-working	
Fan off	X

The value of efficiency and consumption in idle state have been measured by method and conditions defined in the product standard EN 60974-1:20XX.

For machines manufactured for the European market, the year of manufacture is shown on the rating plate as part of the serial number.

Manufacturer's name, product name, code number, product number, serial number and date of production can be read from rating plate.

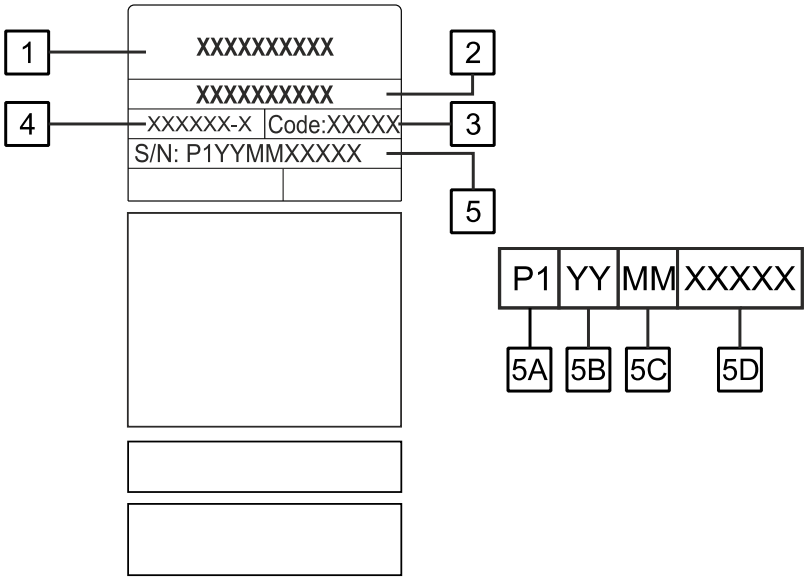

Where:

1 Manufacturer name and address
2 Product name
3 Code number

4 Product number
5 Serial number
- **5A** Country of production
- **5B** Year of production
- **5C** Month of production
- **5D** Progressive number different for each machine

Table 3 :Typical gas usage for MIG/MAG equipment

Material type	Wire diameter [mm]	DC electrode positive		Wire Feeding [mm]	Shielding Gas	Gas flow [l/min]
		Current [A]	Voltage [V]			
Carbon, low alloy steel	0,9 ÷ 1,1	95 ÷ 200	18 ÷ 22	3,5 – 6,5	Ar 75%, CO_2 25%	12
Aluminum	0,8 ÷ 1,6	90 ÷ 240	18 ÷ 26	5,5 – 9,5	Argon	14 ÷ 19
Austenic stainless steel	0,8 ÷ 1,6	85 ÷ 300	21 ÷ 28	3 - 7	Ar 98%, O_2 2% / He 90%, Ar 7,5% CO_2 2,5%	14 ÷ 16
Copper alloy	0,9 ÷ 1,6	175 ÷ 385	23 ÷ 26	6 - 11	Argon	12 ÷ 16
Magnesium	1,6 ÷ 2,4	70 ÷ 335	16 ÷ 26	4 - 15	Argon	24 ÷ 28

TIG Process:

In TIG welding process, gas usage depends on cross-sectional area of the nozzle. For commonly used torches:

Helium: 14-24 l/min.

Argon: 7-16 l/min.

Note: Excessive flow rates causes turbulence in the gas stream which may aspirate atmospheric contamination into the welding pool.

Note: A cross wind or draft moving can disrupt the shielding gas coverage, in the interest of saving of protective gas use screen to block air flow

End of life

At end of life of product, it has to be disposal for recycling in accordance with Directive 2012/19/EU (WEEE), information about the dismantling of product and Critical Raw Material (CRM) present in the product, can be found at https://www.lincolnelectric.com/en-GB/Safety-Document-Search/Critical-Raw-Materials

ELECTROMAGNETIC COMPATIBILITY (EMC)

This machine has been designed in accordance with all relevant directives and standards. However, it may still generate electromagnetic disturbances that can affect other systems like telecommunications (telephone, radio, and television) or other safety systems. These disturbances can cause safety problems in the affected systems. Read and understand this section to eliminate or reduce the amount of electromagnetic disturbance generated by this machine.

⚠ WARNING

This machine has been designed to operate in an industrial area. To operate in a domestic area it is necessary to observe particular precautions to eliminate possible electromagnetic disturbances. The operator must install and operate this equipment as described in this manual. If any electromagnetic disturbances are detected the operator must put in place corrective actions to eliminate these disturbances with, if necessary, assistance from Lincoln Electric.

Before installing the machine, the operator must check the work area for any devices that may malfunction because of electromagnetic disturbances. Consider the following.

- Input and output cables, control cables, and telephone cables that are in or adjacent to the work area and the machine.
- Radio and/or television transmitters and receivers. Computers or computer controlled equipment.
- Safety and control equipment for industrial processes. Equipment for calibration and measurement.
- Personal medical devices like pacemakers and hearing aids.
- Check the electromagnetic immunity for equipment operating in or near the work area. The operator must be sure that all equipment in the area is compatible. This may require additional protection measures.
- The dimensions of the work area to consider will depend on the construction of the area and other activities that are taking place.

Consider the following guidelines to reduce electromagnetic emissions from the machine.

- Connect the machine to the input supply according to this manual. If disturbances occur if may be necessary to take additional precautions such as filtering the input supply.
- The output cables should be kept as short as possible and should be positioned together. If possible connect the work piece to ground in order to reduce the electromagnetic emissions. The operator must check that connecting the work piece to ground does not cause problems or unsafe operating conditions for personnel and equipment.
- Shielding of cables in the work area can reduce electromagnetic emissions. This may be necessary for special applications.

⚠ WARNING

The Class A equipment is not intended for use in residential locations where the electrical power is provided by the public low-voltage supply system. There may be potential difficulties in ensuring electromagnetic compatibility in those locations, due to conducted as well as radiated disturbances.

⚠ WARNING

While a high electromagnetic field occurs, a welding current can fluctuate.

⚠ WARNING

This equipment complies with IEC 61000-3-12.

INSTALLATION

FLEXCUT 35 - TECHNICAL SPECIFICATION

NAME	PRODUCT NUMBER
FLEXCUT® 35	K5821-H, K5821-PS & K5842-H
INPUT	
Input Voltage U_1	120V±15% Single Phase
	230V±15% Single Phase
Frequency	50Hz / 60Hz
Input Power at Rated Cycle (U_1=120V) / PF	1.7 kW @ 100% Duty Cycle / 0.96
	1.9 kW @ 60% Duty Cycle / 0.96
	3.1 kW @ 20% Duty Cycle / 0.96
Input Power at Rated Cycle (U_1=230V) / PF	2.3 kW @ 100% Duty Cycle / 0.99
	2.8 kW @ 60% Duty Cycle / 0.99
	4.1 kW @ 35% Duty Cycle / 0.99

RATED OUTPUT AT 40°C			
Duty Cycle 120V	20% 27A 90.8V	60% 16A 86.4 V	100% 15A 86V
Duty Cycle 230V	35% 35A 94V	60% 27A 90.8 V	100% 21A 88.4V

OUTPUT RANGE	
Cutting Current Range 120V	15 - 27 A
Cutting Current Range 230V	15 - 35 A
Maximum Open Circuit Voltage	320 Vdc

INPUT CABLE AND RECOMMENDED FUSE SIZE		
Fuse (delayed) or Circuit Breaker (“D” characteristic) Size	30 A	
Type of Plug (Included with Machine)	5-20P for 120V	6-50P for 230V
Input Power Cable	#12 (3.3 mm^2)	
Input Power Cable Length	10 ft	

DIMENSIONS AND WEIGHT	
Height	14.1"
Width	8.1"
Length (case only, without torch)	18.4"
Weight	26.6 lbs
EXTERNAL INLET COMPRESSED AIR	
Required Inlet Flow Rate	10 ±10% cfm
Required Inlet Pressure	90-130 psi
OTHERS	
Protection Rating	IP23S
Operating Temperature	from 14°F to 104°F
Storage Temperature	from -13°F to +131°F
Engine Drive Auxiliary Power	5.5 kW for 35 A
Certification Marks	CSA (IEC 60974-1)
Ground Wire	#5 (16.8 mm^2)

FLEXCUT® 35 CE - TECHNICAL SPECIFICATIONS

NAME	PRODUCT NUMBER
FLEXCUT® 35 CE	**K14450-1**
INPUT	
Input Voltage U_1	120V±15% Single Phase
	230V±15% Single Phase
Frequency	50Hz / 60Hz
EMC Class	A
Input Power at Rated Cycle (U_1=120V) / PF	1,7 kW @ 100% Duty Cycle / 0,96
	1,9 kW @ 60% Duty Cycle / 0,96
	2,4 kW @ 20% Duty Cycle / 096
Input Power at Rated Cycle (U_1=230V) / PF	2,3 kW @ 100% Duty Cycle / 0,99
	2,8 kW @ 60% Duty Cycle / 0,99
	4,1 kW @ 35% Duty Cycle / 0,99
RATED OUTPUT AT 40°C	
Duty Cycle 120V	20% 22A 88,8 V | 60% 16A 86,4V | 100% 15A 86V
Duty Cycle 230V	35% 35A 94V | 60% 27A 90,8V | 100% 21A 88,4V
OUTPUT RANGE	
Cutting Current Range 120V	15 ÷ 22 A
Cutting Current Range 230V	15 ÷ 35 A
Maximum Open Circuit Voltage	320Vdc
INPUT CABLE AND RECOMMENDED FUSE SIZE	
Fuse (delayed) or Circuit Breaker	B20 A, B16 A*
Type of Plug (Included with Machine)	250V / 16A
Input Power Cable	3x2.5mm^2
DIMENSIONS AND WEIGHT	
Height	359mm
Width	205mm
Length (case only, without torch)	468mm
Weight	12kg
EXTERNAL INLET COMPRESSED AIR	
Required Inlet Flow Rate	285 ±10% l/min
Required Inlet Pressure	6,2bar – 8,9bar (90-130 psi)
OTHERS	
Protection Rating	IP23S
Operating Temperature	from -10 °C to +40 °C (14°F to 104°F)
Storage Temperature	from -25 °C to 55°C (-13°F to +131°F)

* When the device is connected to a power supply protected by a B16 A circuit breaker, the breaker may trip during cutting operations, depending on various factors such as the distance from the distribution board, supply network impedance, and operator technique. In such cases, the use of a B20 A circuit breaker is recommended (as for operation with an extension cord).

If the B16 A circuit breaker trips, select the appropriate fuse type in the user interface; this may result in a reduction of the maximum output current.

GENERAL DESCRIPTION

The FLEXCUT® 35 is a constant current, continuous control plasma cutting power source. It provides superior and reliable starting characteristics, cutting visibility and arc stability. The control system has a safety mechanism to insure that the nozzle and electrode are in place before cutting or gouging. This is extremely important due to the high voltages involved.

SPECIFIC HAZARD STATEMENTS

⚠ WARNING

ELECTRIC SHOCK CAN KILL

Only personnel should install this machine.

Turn the input power OFF at the disconnect switch or fuse box and discharge input capacitors before working inside the equipment.

Do not touch electrically hot parts.

Turn the FLEXCUT® 35 Power Switch OFF when connecting power cord to input power.

SELECT PROPER LOCATION

Place the FLEXCUT® 35 where clean, cool air can freely circulate in and out of the side louvers. Dirt, dust or any foreign material that can be drawn into the machine should be kept at a minimum. Failure to observe these precautions can result in excessive operating temperatures and nuisance shutdown of the machine.

A source of clean, dry air or nitrogen must be supplied to the FLEXCUT® 35 when using external air supply. Oil in the air is a severe problem and must be avoided. The supply pressure must be between 90 and 130 psi (6.2 and 8.96 bar). Failure to observe these precautions could result in excessive operating temperatures or damage to the torch.

ENVIRONMENTAL LIMITATIONS

The FLEXCUT® 35 is IP23S rated. Locate the plasma cutter in a dry location with free circulation of clean air into the back. Select a location to minimize the amount of smoke and dirt from being drawn into the rear of the machine. The best practice is to keep the machine in a dry, sheltered area. The machine should not be subjected to falling water during use nor should any parts of it be submerged in water. Use protective cover K2377-1 when not in use.

STACKING

The FLEXCUT® 35 CANNOT be stacked

TILTING

The FLEXCUT® 35 must be placed on a stable, level surface so it will not topple over.

HIGH FREQUENCY INTERFERENCE PROTECTION

The FLEXCUT® 35 employs a touch start mechanism for arc initiation which eliminates high frequency emissions from the machine as compared with spark gap and solid-state type high frequency generators. Keep in mind, though, that these machines may be used in an environment where other high frequency generating machines are operating. By taking the following steps, high frequency interference into the FLEXCUT® 35 can be minimized.

- Make sure the power supply chassis is connected to a good earth ground. The work terminal ground does NOT ground the machine frame.
- Keep the work clamp isolated from other work clamps that have high frequency.
- If the work clamp cannot be isolated, then keep the clamp as far as possible from other work clamp connections.
- When the machine is enclosed in a metal building, several good earth driven electrical grounds around the periphery of the building are recommended.

Failure to observe these recommended installation procedures may cause improper function of the FLEXCUT® 35 or possibly even damage to the control system or power supply components.

INPUT ELECTRICAL CONNECTIONS

The FLEXCUT® 35 is rated for 230VAC and 120VAC input voltages. Before installing the machine, check that input supply voltage, phase, and frequency are the same as the machine's voltage, phase, and frequency as specified on the machine's rating plate.

- The FLEXCUT® 35 should be connected only by a qualified electrician. Installation should be made in accordance with local codes.

For use on engine drives, keep in mind the above input draw restrictions and the following precaution.

The FLEXCUT® 35 can be operated on engine driven generators as long as the 230 volt or 120 volt auxiliary meets the following conditions:

- 230 Volt Conditions
  - The AC waveform peak voltage is below 400 volts.
  - The AC waveform frequency is 60 Hz.
  - The RMS voltage of the AC waveform is always greater than 208VAC.
- 120 Volt Conditions
  - The AC waveform peak voltage is below 170 volts.
  - The AC waveform frequency is 60 Hz.
  - The RMS voltage of the AC waveform is always greater than 114VAC.

Operation of the FLEXCUT® 35 is not recommended on engine drives not conforming to these conditions. Such combination may over voltage the FLEXCUT® 35 power source.

GAS INPUT CONNECTIONS

(External Air Supply)

Supply the FLEXCUT® 35 with clean compressed air or nitrogen.

- Supply pressure must be between 90 psi (6.2 bar) and 130 psi (8.96 bar).

Note: Oil in the air supply to the FLEXCUT® 35 can cause severe problems. Use only a clean air supply.

- Compressed gas can be supplied through the air port at the rear of the machine.
- If compressed air is being used, it is highly recommended that an in-line filter be installed in the air supply line ahead of the air connection to the FLEXCUT® 35.
- A standard nominal 5 micron in line filter is recommended; however, for optimum performance, select a pre-filter with a 3 micron absolute rating.

If these filter ratings are unavailable, anything with a rating less than, or equal to, 20 micron would be acceptable to use. In-line filter elements will generally filter the air with little restriction to the airflow until the element is about 75% contaminated. After this point, there will be a noticeable pressure drop in the line. Filter elements should be replaced when a pressure drop of 8-10 psi (0.55-0.69 bar) is indicated; however, for optimum performance of the FLEXCUT® 35, the filter element should be replaced at or before the pressure drop reaches 8 psi (0.69bar). Be sure to select a filter that will accommodate the necessary flow rating for the FLEXCUT® 35 as specified in the installation section of this instruction manual under the Gas Input Connections heading.

Note: When using nitrogen gas from a cylinder, the cylinder must have a pressure regulator.

- Maximum psi from a nitrogen gas cylinder to the FLEXCUT® 35 regulator should never exceed 130 psi (8.96bar).
- Install a hose between the nitrogen gas cylinder regulator and the FLEXCUT® 35 gas inlet

⚠ WARNING

CYLINDER COULD EXPLODE IF DAMAGED

Keep cylinder upright and chained to a fixed support.

Keep cylinder away from area where is could be damaged.

Never lift machine with cylinder attached.

Never allow the cutting torch to touch the cylinder.

Keep the cylinder away from live electrical parts.

Maximum inlet pressure 130 psi (8.96bar).

OUTPUT CONNECTIONS

Torch

The clamp must be securely connected to the work piece. If the work piece is painted or extremely dirty it may be necessary to expose the bare metal to make a good electrical connection.

OPERATION

SPECIFIC HAZARD STATEMENTS

⚠ WARNING

PLASMA ARC CAN INJURE

Keep your body away from nozzle and plasma arc.

Operate the pilot arc with caution. The pilot arc is capable of burning the operator, others or even piercing safety clothing.

Observe additional Safety Guidelines detailed in the beginning of this manual.

PREHEAT TEMPERATURE FOR PLASMA CUTTING

Preheat temperature control is not necessary in most applications when plasma arc cutting or gouging. Preheat temperature control may be necessary on high carbon alloy steels and heat treated aluminum for crack resistance and hardness control. Job conditions, prevailing codes, alloy level, and other considerations may also require preheat temperature control. The following minimum preheat temperature is recommended as a starting point. Higher temperatures may be used as required by the job conditions and/or prevailing codes. If cracking or excessive hardness occurs on the cut face, higher preheat temperature may be required. The recommended minimum preheat temperature for plate thickness up to 1/2" (12.7 mm) is 70°F (21.1°C).

USER RESPONSIBILITY

Because design, fabrication, erection and cutting variables affect the results obtained in applying this type of information, the serviceability of a product or structure is the responsibility of the user. Variation such as plate chemistry, plate surface condition (oil, scale), plate thickness, preheat, quench, gas type, gas flow rate and equipment may produce results different than those expected. Some adjustments to procedures may be necessary to compensate for unique individual conditions. Test all procedures duplicating actual conditions.

DESIGN FEATURES AND ADVANTAGES

The FLEXCUT® 35 design makes plasma cutting easy. This list of design features and advantages will help you understand the machine's total capabilities so that you can get maximum use from your machine.

- Lightweight and portable design for industrial use
- Digital control
- 15-35 amps
- Reliable touch start mechanism for plasma arc initiation
- Input over-voltage protection
- Bright 3 second timed pilot arc
- Digital control for gas purge selection
- Parts-in-Place mechanism to detect proper installation of consumables and torch
- Thermostatic protection

- Solid state over-current protection
- Proprietary electrode, nozzle, and shield cap for optimum cooling, cut quality and long life

CUTTING CAPABILITY

The FLEXCUT® 35 is rated at 35 amps, at 35% duty cycle on a 10 minute basis. If the duty cycle is exceeded, a thermal protector will shut off the output of the machine until it cools to the normal operating temperature.

CAPACITIES

Maximum Output Current

Cut Capacity - Steel Material Thickness

Recommended cut capacity at 20 ipm 1/4 in (508mm/min 6.35mm).
Recommended cut capacity at 10 ipm 3/8 in (254mm/min 9.53mm).
Severance capacity at 5 ipm 1/2 in (127mm/min 12.7mm).

- Maximum cut speeds are based on results obtained from Lincoln Electric laboratory testing.
- Different cutting applications may alter the actual cutting speed.

LIMITATIONS

Do not exceed output current and duty cycle rating of machine. Do not use the FLEXCUT® 35 for pipe thawing.

MACHINE SYMBOLOGY

GRAPHIC SYMBOLS THAT APPEAR ON THIS MACHINE OR IN THIS MANUAL			
	WARNING OR CAUTION		PHASE
	GAS PURGE		CUT
	HIGH TEMPERATURE		POWER ON
	INCORRECT INPUT VOLTAGE		POWER OFF
	READ INSTRUCTION MANUAL		CUTTING GUIDE
	PROTECTIVE GROUND		ADVANCED SETTINGS

CONTROLS AND SETTINGS

FLEXCUT® 35 User Interface

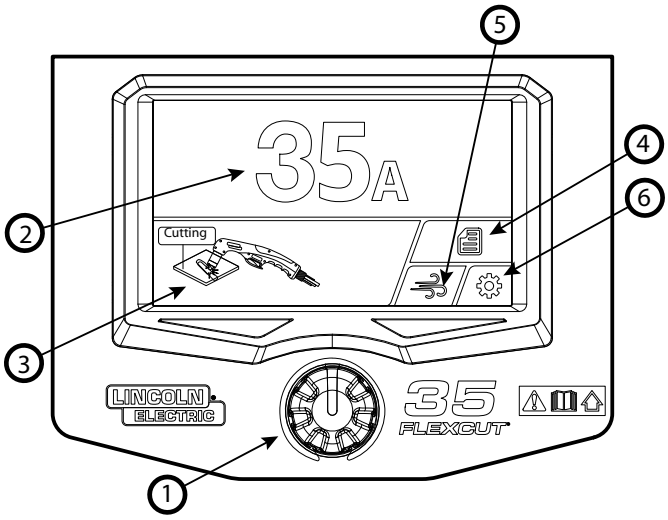

1. **Control Knob:** For setting output and settings within the user interface.
2. **Output Current:** Displays amperage output setting of the machine.
3. **Operating Process:** Displays the process selected. Choose between Cutting and Grid.
4. **Cutting Guide:** Option to suggest recommended output amperage and cutting speed based on material and thickness selected
5. **Gas Purge:** Selection will purge air through the torch without activating the output.
6. **Advanced Settings:** Additional menu with option to select torch trigger setting, machine language, and measurement units.

Operating Settings Adjustment

- Output Current (2)
  - Rotate the Control Knob (1) to set the machine to the desired amperage.
- Operating Process (3)
  - Press Control Knob (1) once to access settings
  - Press Control Knob (1) again to select (3).
  - Select the desired operating process by rotating Control Knob (1). Choose from Cutting and Grid.
  - Press Control Knob (1) to finalize selection.
- Gas Purge (5)
  - Press Control Knob (1) once to access settings
  - Rotate Control Knob (1) to Gas Purge (5), and then press Control Knob (1) again to select (5).
  - To stop the purge, press the Control Knob (1).
- At any location on the main user interface, quickly press Control Knob (1) twice to return to Output Current (2) adjustment.

Other Settings

- Cutting Guide (4)

- Press Control Knob (1) once to access settings
- Rotate Control Knob (1) to Cutting Guide (4), and then press Control Knob (1) again to select (4).
- Use Control Knob (1) to select Material and Thickness
- Suggested amperage is shown for Hand held cutting, while amperage and speed are shown for Mechanized cutting. CNC connection must be present for Mechanized cutting suggestions.
- Rotate Control Knob (1) to Back and press (1) to return to the main screen.

- Advanced Settings (6)
  - Press Control Knob (1) once to access settings
  - Rotate Control Knob (1) to Advanced Settings (6), and then press Control Knob (1) again to select (6).
  - Use Control Knob (1) to rotate through Advanced Settings (6) sub menu.
    - Torch Trigger Setting
      - Press Control Knob (1) to select either a 2-Stage (2T) or 4-Stage (4T) Trigger for the torch.
    - Language
      - Press Control Knob (1) to access Language sub menu.
      - Rotate Control Knob (1) to view all 22 User Interface language options.
      - Press Control Knob (1) to finalize selection.
  - Measurement Units
    - Press Control Knob (1) to select either Imperial or Metric units for the machine User Interface.
    - Rotate Control Knob (1) to Back and press (1) to return to the main screen.
- Pressure Control
  - **⚠ WARNING**

    ELECTRIC SHOCK CAN KILL

    Ensure machine is powered off and properly grounded prior to disassembling the power source.

  - Remove 4 screw caps on the machine handle and use a screwdriver to remove the 4 screws. Lift the handle off the machine.

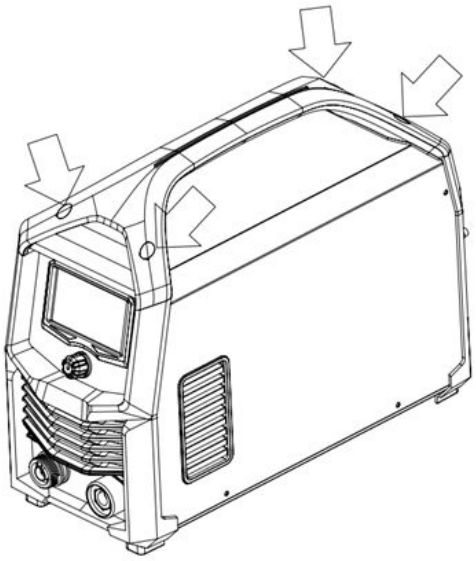

- Remove 2 screws from the rear feet and 2 screws from the rear case. Remove the rear case from the machine.

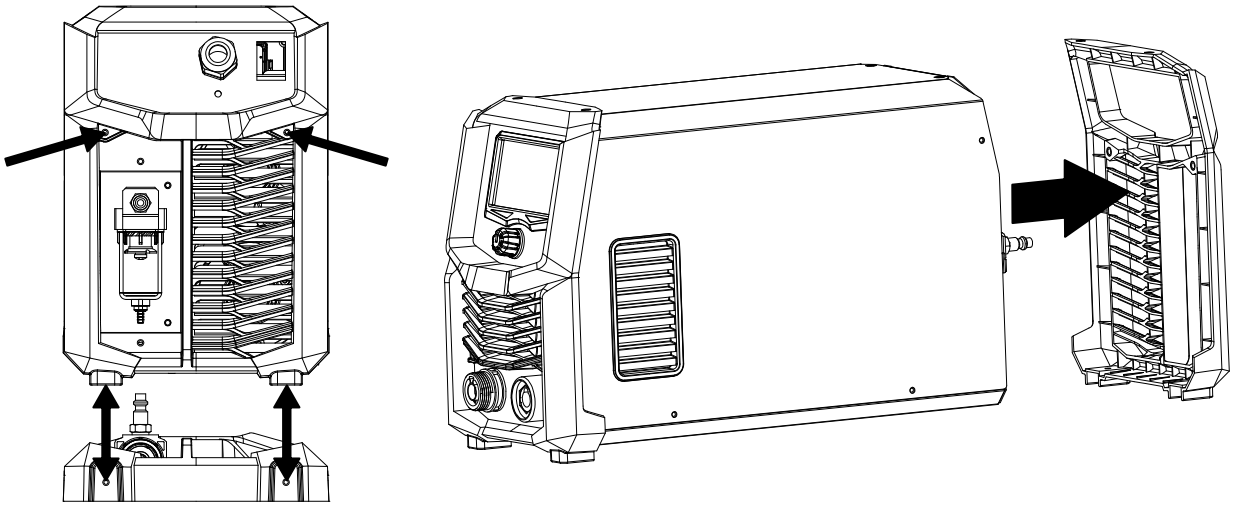

- Remove the 3 sheet metal screws on either side of the sheet metal cover for a total of 6 screws. Lift the sheet metal cover off the machine.
- Locate the pressure regulator on the inside right hand side of the machine. Push and rotate the valve to the desired pressure level.

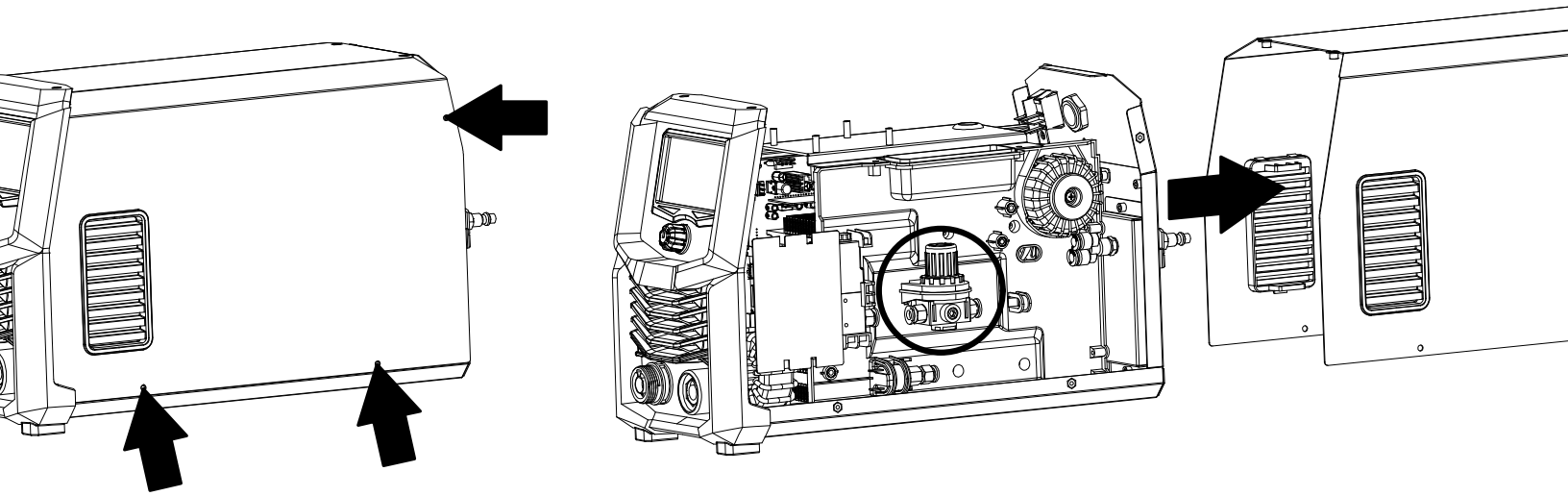

- Assemble sheet metal cover, rear case and handle back onto the machine properly.

FLEXCUT® 35 Front Panel

1. **Torch Connection:** Connect hand-held or machine torch.
2. **Work Connection:** Connect cable with work clamp.

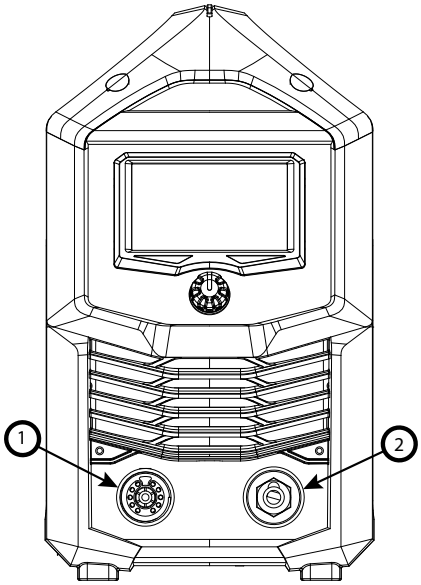

FLEXCUT® 35 Rear Panel

1. **Power Switch:** Turns the input power to the machine ON/OFF.
2. **Input Power Cable (10 ft./ 3.05m):** Connects the unit to input power.
3. **Pressurized Air Input (1/4" / 6.35mm NPT Quick Connect):** Compressed air or gas connection.

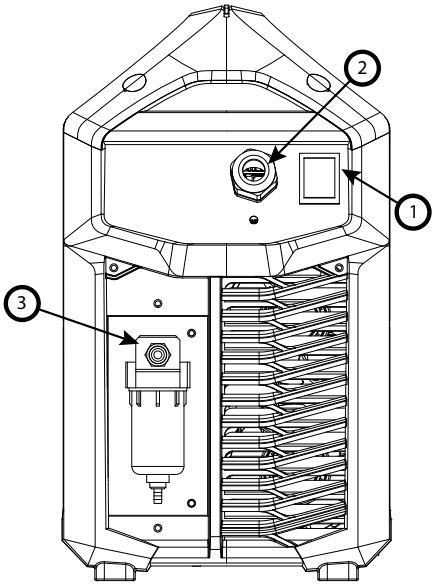

HAND CUTTING

TORCH PART CONFIGURATIONS

Different hand-held torch configurations are available depending on the application.

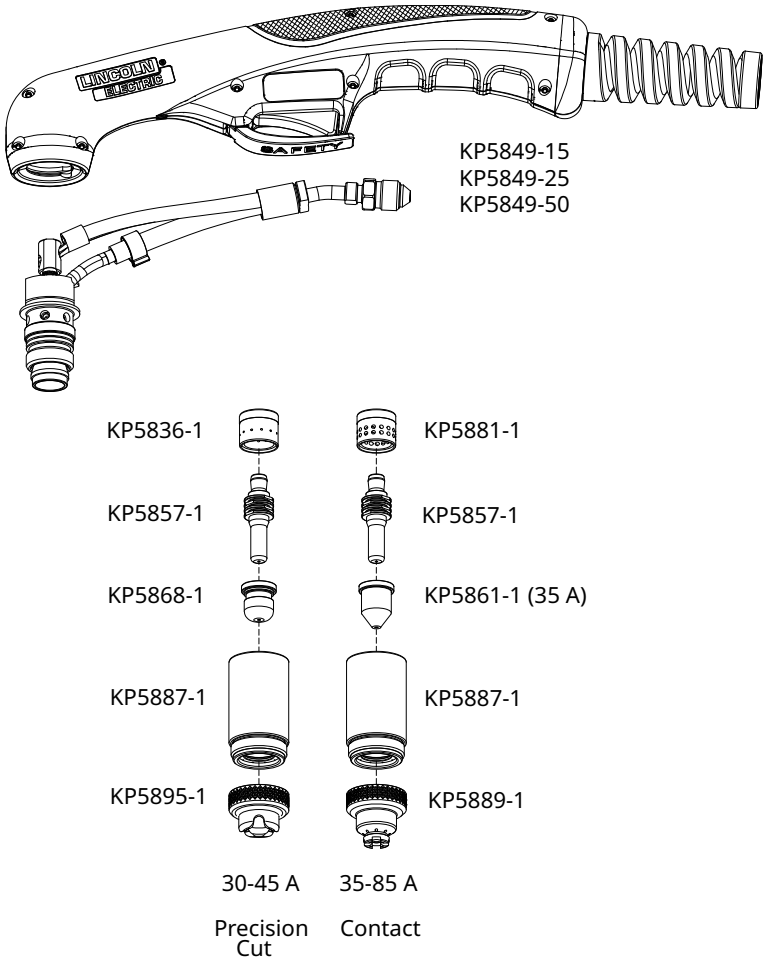

Always use genuine Lincoln Electric electrodes, nozzles, and expendable parts for the best performance.

Hand Cutting Process

The air plasma cutting process uses air or nitrogen as a cutting gas and to cool the torch.

The FLEXCUT® 35 provides constant current at the set value, independent of the plasma arc length.

When preparing to operate, make sure you have all materials needed to complete the job and have taken all safety precautions. Install the machine as instructed in this manual and remember to attach the work clamp to the work piece.

- With the machine switched OFF, prepare the torch with the consumables adequate to the desired process (CUTTING / GRID).
- Connect the Torch and the work cable to the machine.
- Turn ON the Power Switch on the back of the machine; the display on the front panel will illuminate. The unit is now ready to operate.
- Verify correct gas pressure is being input into the machine.

- Select the desired process using the Control Knob on the user interface.
- Set the desired cutting current using the Control Knob on the user interface.
- Pilot Arc
  - The air will flow for a pre flow time of 2 seconds and the pilot arc will start. (Exceptions: after a thermal, the initial trigger will be ignored. This is a safety feature to prevent the pilot arc from firing unexpectedly. The other exception is if the machine is in post flow, then the pre flow time is skipped and the pilot arc will start immediately.)
  - The pilot arc will run for 3 seconds and shut off unless the arc is brought in contact with the work and the arc is transferred. Avoid excessive pilot arc time by transferring the arc to the workpiece quickly. This will extend consumable life.
  - When the arc is brought within 1/8” - 1/4" (3.2mm - 6.35mm) from the work piece the arc will transfer, the current will ramp to the setting on the control panel, and the cut can last indefinitely (or until the duty cycle of the FLEXCUT® 35 is exceeded).

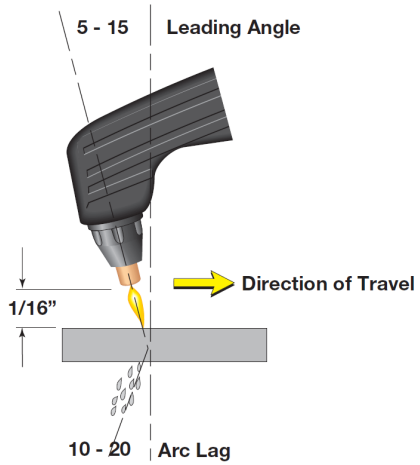

- Pierce the work piece by slowly lowering the torch onto the metal at a 30º angle away from the operator. This will blow the dross away from the torch tip. Slowly rotate the torch to vertical position as the arc becomes deeper.
- Keep moving while cutting. Cut at a steady speed without pausing. Maintain the cutting speed so that the arc lag is 10° to 20° behind the travel direction.
- Use a 5° - 15° leading angle in the direction of the cut.
- Finish the cut to be made and release the trigger.
- If the dross is difficult to remove, reduce the cutting speed. High speed dross is more difficult to remove than low speed dross.
- The Post Flow time is 20 seconds.

Hand Cutting Charts

The cutting charts shown on the following pages are intended to give the operator the best starting point to use when making a cut on a particular material type and thickness. Small adjustments may have to be made to achieve the best cut. Also, remember that the arc voltage must be increased as the electrode wears to maintain the correct cutting height.

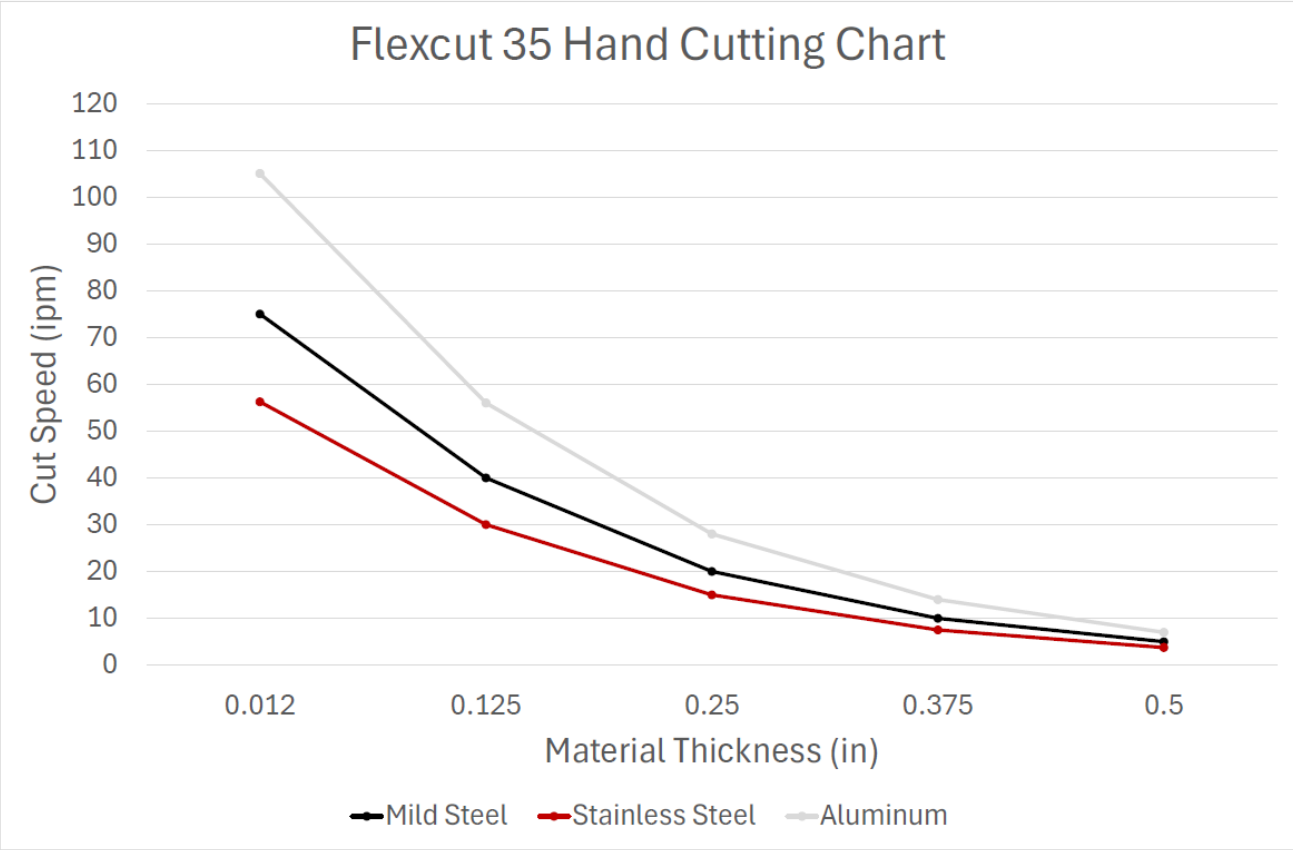

⚠ WARNING

When using a water table and cutting aluminum under water or with water touching the underside at the aluminum plate, hydrogen gas is produced. This hydrogen gas may collect under the plate and explode during the cutting process.

Make sure the water table is properly aerated to help prevent the accumulation of hydrogen gas.

CUT QUALITY

Before best quality cutting condition can be achieved on a particular material type and thickness, the machine operator must have a thorough understanding of the cutting characteristics of the FLEXCUT® 35. When the cut quality is not satisfactory, the cutting speed, torch height, or gas pressures may need to be adjusted in small increments until the proper cutting condition is obtained. The following guidelines should be useful in determining which cutting parameter to adjust.

Note: Before marking any parameter changes, verify that the torch is square to the work piece. Also, it is essential to have the correct torch parts in place to ensure that they are in good condition. Check the electrode for excessive wear and the nozzle and shield cap orifices for roundness. Also, check the parts for any dents or distortions. Irregularities in the torch parts can cause cut quality problems.

1. A positive cut angle (top dimension of piece smaller than the bottom dimension) usually occurs when the torch standoff distance is too high, when cutting too fast, or when excessive power is used to cut a given plate thickness.

2. A negative cut angle (top dimension of piece larger than the bottom dimension) usually occurs when the torch standoff distance is too low or when the cutting speed is too slow.
3. Top dross usually occurs when the torch standoff distance is too high.
4. Bottom dross usually occurs when the cutting speed is either too slow (slow speed dross) or too fast (high-speed dross). Low speed dross is easily removed, while high-speed dross usually requires grinding or chipping off. Bottom dross also occurs more frequently as the metal heats up. As more pieces are cut out of a particular plate, the more likely they are to form dross.
5. Note that different material compositions have an effect on dross formation.
6. If the material is not being completely severed, the likely causes are that the cutting current is too low, the travel speed is too high, the gas pressure is incorrect, the incorrect consumables are installed in the torch, or the consumables are worn.

ACCESSORIES AND OPTIONS

ACCESSORIES AND OPTIONS

CONSUMABLE PROCESS KITS		
Part No.	**Description**	**QTY**
KP5829-35	Flexcut Pro Drag Cutting Kit - 35 A	1
KP5833-45	Flexcut Pro Precision Cutting Kit - 45 A	1

INDIVIDUAL CONSUMABLES		
Part No.	**Description**	**QTY**
KP5857-1	Flexcut Pro Electrode	5
KP5857-B25	Flexcut Pro Electrode, 25/pack	25
KP5861-1	Flexcut Pro Cutting Nozzle (35 A)	10
KP5861-B25	Flexcut Pro Cutting Nozzle (35 A), 25/pack	25
KP5868-1	Flexcut Pro Precision Cut Nozzle	10
KP5881-1	Flexcut Pro Swirl Ring (35-85 A)	2
KP5836-1	Flexcut Pro Precision Cut Swirl Ring (45 A)	2
KP5887-1	Flexcut Pro Shield Cup Body (35-125 A)	1
KP5889-1	Flexcut Pro Drag Cutting Shield Cap (35-85 A)	3
KP5889-B10	Flexcut Pro Drag Cutting Shield Cap (35-85 A), 10/pack	10
KP5895-1	Flexcut Pro Precision Cut Defelector Shield Cap	3

TORCH ACCESSORIES		
Part No.	**Description**	**QTY**
KP5849-25	Flexcut Pro Torch - 25 FT [7.5 m]	1
KP5849-50	Flexcut Pro Torch - 50 FT [15 m]	1
KP5850-25	Flexcut Pro FlexConnect Torch - 25 FT [7.5 m]	1
KP5850-50	Flexcut Pro FlexConnect Torch - 50 FT [15 m]	1
KP5839-25	Flexcut Pro FlexConnect Cable - 25 FT [7.5 m]	1
KP5839-50	Flexcut Pro FlexConnect Cable - 50 FT [15 m]	1
KP5855-1	Flexcut Pro FlexConnect 75° Handheld Torch Head	1
KP5856-1	Flexcut Pro FlexConnect 15° Handheld Torch Head	1
KP5838-1	Flexcut Pro FlexConnect Extended Reach Torch Head	1
KP5920-1	Flexcut Pro XL FlexConnect Extended Reach Torch Head	1
KP5916-1	Flexcut Pro Circle Cutting Kit	1
KP5917-1	Flexcut Pro Straight & Angle Cutting Kit	1
KP5919-1	Flexcut Pro Mechafin Torch Adapter	1
KP5849-15	Flexcut Pro Torch - 15 FT [4.5 m]	1

MAINTENANCE

CONSUMABLE LIFE

⚠ WARNING

ELECTRIC SHOCK CAN KILL

Turn off machine at the disconnect switch on the rear of the machine before tightening, cleaning, or replacing consumables.

Use the following guidelines to maximize consumable parts life:

1. The FLEXCUT® 35 utilizes the latest advancement in technology for extending the life of the torch consumable parts. To maximize the life of the consumable parts, it is imperative that the shutdown procedure of the arc is carried out properly. The arc must be extinguished while it is still attached to the workpiece. A popping noise may be heard if the arc extinguishes abnormally. Note that holes are usually programmed without lead-outs to prevent loss of the arc during shutdown.
2. Use the recommended pierce height given in the cutting charts. A pierce height that is too low will allow molten metal that is ejected during the piercing process to damage the shield cap and nozzle. A pierce height that is too high will cause the pilot arc time to be excessively long and will cause nozzle damage.
3. Minimize firing the torch in the air. Nozzle damage will occur.
4. Make sure the torch does not touch the plate while cutting. Shield cap and nozzle damage will result.
5. Use a chain cut when possible. Starting and stopping the torch is more detrimental to the consumables than making a continuous cut.
6. Occasionally an oxide layer may form over the tip of the electrode, creating an insulating barrier between the electrode and nozzle. This will result in false starts. When this happens turn the power off, remove the shield cup and nozzle. Rub the inside surface of the nozzle, this will help remove any oxide buildup. Also, clean any oxide build up from the electrode. Replace the shield cup and nozzle, turn on the power and continue cutting. If false starts continue to occur after cleaning the consumables, then replace them with a new set. Do not continue to try and cut with excessively worn consumables as this can cause damage to the torch head and will degrade cut quality. Do not allow torch cable or body to contact hot surfaces.
7. Use only Lincoln consumable parts. These parts are patented and using any other replacement consumables may cause damage to the torch or reduce cut quality.
8. Make sure the air supply is clean and free of oil. Use several extra in line filters if necessary.
9. Minimize dross buildup on the nozzle tip by starting the cut from the edge of the plate when possible.
10. Pierce cutting should be done only when necessary. If piercing, angle torch about 30° from the plane perpendicular to the work piece, transfer the arc, then bring the torch perpendicular to the work and begin parallel movement.
11. Reduce the number of pilot arc starts without and/or before transferring to the work.
12. Set air pressure to recommended setting. A higher or lower pressure will cause turbulence in the plasma arc, eroding the orifice of the nozzle tip.

INSPECTION OF CONSUMABLE PARTS

When the cut quality is not satisfactory, use the following guidelines for determining which consumable parts need to be changed. Inspect all parts for dirt or debris and clean as necessary.

PART	INSPECT FOR	CORRECTIVE ACTION
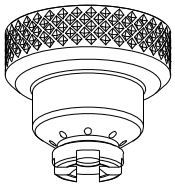 Shield Cap	Center hole out of round Dents, Scratches	Replace Shield Cap Replace Shield Cap
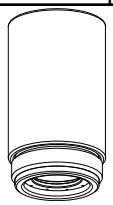 Retaining Cap	Center hole out of round Dents, Scratches	Replace Retaining Cap Replace Retaining Cap
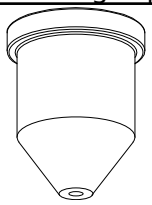 Nozzle	Center hole out of round Erosion or Arcing	Replace Nozzle Replace Nozzle
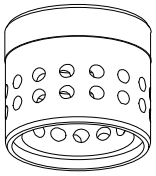 Swirl Ring	Damage Clogged holes	Replace Swirl Ring Blow out with compressed air Replace Swirl Ring if clogs cant be removed
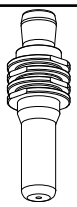 Electrode	Pit Depth Erosion or Arcing	Replace Electrode if center pit depth is greater than .060" (1.5 MM) Replace Electrode

TROUBLESHOOTING

HOW TO USE TROUBLESHOOTING GUIDE

⚠ WARNING

Service and Repair should only be performed by Lincoln Electric Factory Trained Personnel. Unauthorized repairs performed on this equipment may result in danger to the technician and machine operator and will invalidate your factory warranty. For your safety and to avoid Electrical Shock, please observe all safety notes and precautions detailed throughout this manual.

This Troubleshooting Guide is provided to help you locate and repair possible machine malfunctions. Simply follow the three-step procedure listed below.

1. **LOCATE PROBLEM (SYMPTOM)**

   Look under the column labeled “PROBLEM (SYMPTOMS)”. This column describes possible symptoms that the machine may exhibit. Find the listing that best describes the symptom that the machine is exhibiting.
2. **POSSIBLE CAUSE**

   The second column labeled “POSSIBLE CAUSE” lists the obvious external possibilities that may contribute to the machine symptom.
3. **RECOMMENDED COURSE OF ACTION**

   This column provides a course of action for the Possible Cause, generally it states to contact your local Lincoln Authorized Field Service Facility.

⚠ CAUTION

If you do not understand or are unable to perform the Recommended Course of Action safely, contact your local Lincoln Authorized Field Service Facility.

Observe all additional safety guidelines detailed throughout this manual.

TROUBLESHOOTING GUIDE

Input circuit breaker trips repeatedly.	
Possible Cause	**1.** Verify that the input circuit protection is properly sized per the voltage being supplied. See Technical Specification page. **2.** Install a larger input circuit or turn the output control to a lower amperage. **3.** Check the input power to be sure it is on.
Corrective Action	If all recommended possible areas of misadjustment have been checked and the problem persists, Contact your local Lincoln Authorized Field Service Facility.

Display does not turn on and the fan does not operate after the power switch is turned on.	
Possible Cause	**1.** Check the power line fuses or breakers and machine connection. **2.** Disconnect input power at fuse/breaker panel and check line switch continuity. Replace line switch if bad. **3.** Possible faulty Control Board.
Corrective Action	If all recommended possible areas of misadjustment have been checked and the problem persists, Contact your local Lincoln Authorized Field Service Facility.
Display does not turn on, but the fan operates.	
Possible Cause	**1.** Possible faulty Control Board.
Corrective Action	If all recommended possible areas of misadjustment have been checked and the problem persists, Contact your local Lincoln Authorized Field Service Facility.
F1 Error stays on the display.	
Possible Cause	**1.** Check that the louvres are not blocked. Check that fan rotates freely Check that heat sink fins are not clogged with dirt
Corrective Action	If all recommended possible areas of misadjustment have been checked and the problem persists, Contact your local Lincoln Authorized Field Service Facility.
The machine powers up properly, but there is no response when the trigger is pulled.	
Possible Cause	**1.** Use the control knob to turn on the Air Purge function. If air does not flow, then: • The main gas solenoid assembly/pressure sensor may be faulty. Check or replace. • Possible faulty Control board. **2.** Remove the handles (or barrel) of the torch and examine all the connections. **3.** Check for proper trigger switch operation. Replace the trigger switch or torch cable if defective. **4.** Possible faulty Control board.
Corrective Action	If all recommended possible areas of misadjustment have been checked and the problem persists, Contact your local Lincoln Authorized Field Service Facility.
When the trigger is pulled air begins to flow, but there is no pilot arc after at least 3 seconds.	
Possible Cause	**1.** Check the torch consumables to be sure they are not dirty or greasy, and are in good shape. Replace the consumables if necessary. **2.** Make sure the air pressure is set correctly. **3.** Make sure there are no kinks or restrictions for air flow in the torch cable. Replace cable as needed. **4.** If a slight thump cannot be felt in the torch when the trigger is pulled, check for loose connection in the torch head. **5.** Possible faulty Control board.
Corrective Action	If all recommended possible areas of misadjustment have been checked and the problem persists, Contact your local Lincoln Authorized Field Service Facility.
The air begins to flow and there is a very brief arc that snap out consistently with repeated trigger pulls.	
Possible Cause	**1.** Check the torch consumables to be sure they are in tight, not dirty or greasy and in good shape. Replace if necessary. **2.** Make sure the air pressure is set correctly. **3.** Possible faulty Control board.
Corrective Action	If all recommended possible areas of misadjustment have been checked and the problem persists, Contact your local Lincoln Authorized Field Service Facility.

The arc starts but sputters badly.	
Possible Cause	**1.** Check the torch consumables to be sure they are in tight, not dirty or greasy and in good shape. Replace if necessary. **2.** Check air supply for oil or a great deal of water. If there is oil or a great deal of water, the air must be filtered or the machine switched to nitrogen or bottled air. **3.** Make sure the air pressure is set correctly.
Corrective Action	If all recommended possible areas of misadjustment have been checked and the problem persists, Contact your local Lincoln Authorized Field Service Facility.
Pilot arc starts will not transfer when brought near the work piece.	
Possible Cause	**1.** Check work lead connection for clean, secure connection. **2.** Plasma will only cut conductive material. Do not attempt to cut fiberglass, plastic, rubber, PVC or any other non-conductive material. **3.** Make sure work piece is clean and dry. Remove any scale, rust or dross. **4.** Check all connections to Control board. **5.** Possible faulty Control board.
Corrective Action	If all recommended possible areas of misadjustment have been checked and the problem persists, Contact your local Lincoln Authorized Field Service Facility.

ERROR CODES

The following table below shows the list of possible error codes the machine could show on the user interface display. Carefully review the list provided and see the “Troubleshooting” section of this manual for the appropriate corrective action for each error.

WARNING	ICON	DESCRIPTION	WARNING	ICON	DESCRIPTION
F01		High Temperature	F06		Electrode and Nozzle stuck together
F02		Incorrect Input Voltage	F07		Electrode and Nozzle failed to reset
F03		Shield Cup loose or missing	F14		Lack of Phase
F04		Insufficient Input Air pressure	F23		PFC Abnormality
F05		Torch triggered before Machine is turned ON			

WIRING DIAGRAMS

WIRING DIAGRAM - CODE 13784, 13930, 14053, 14085, 50748

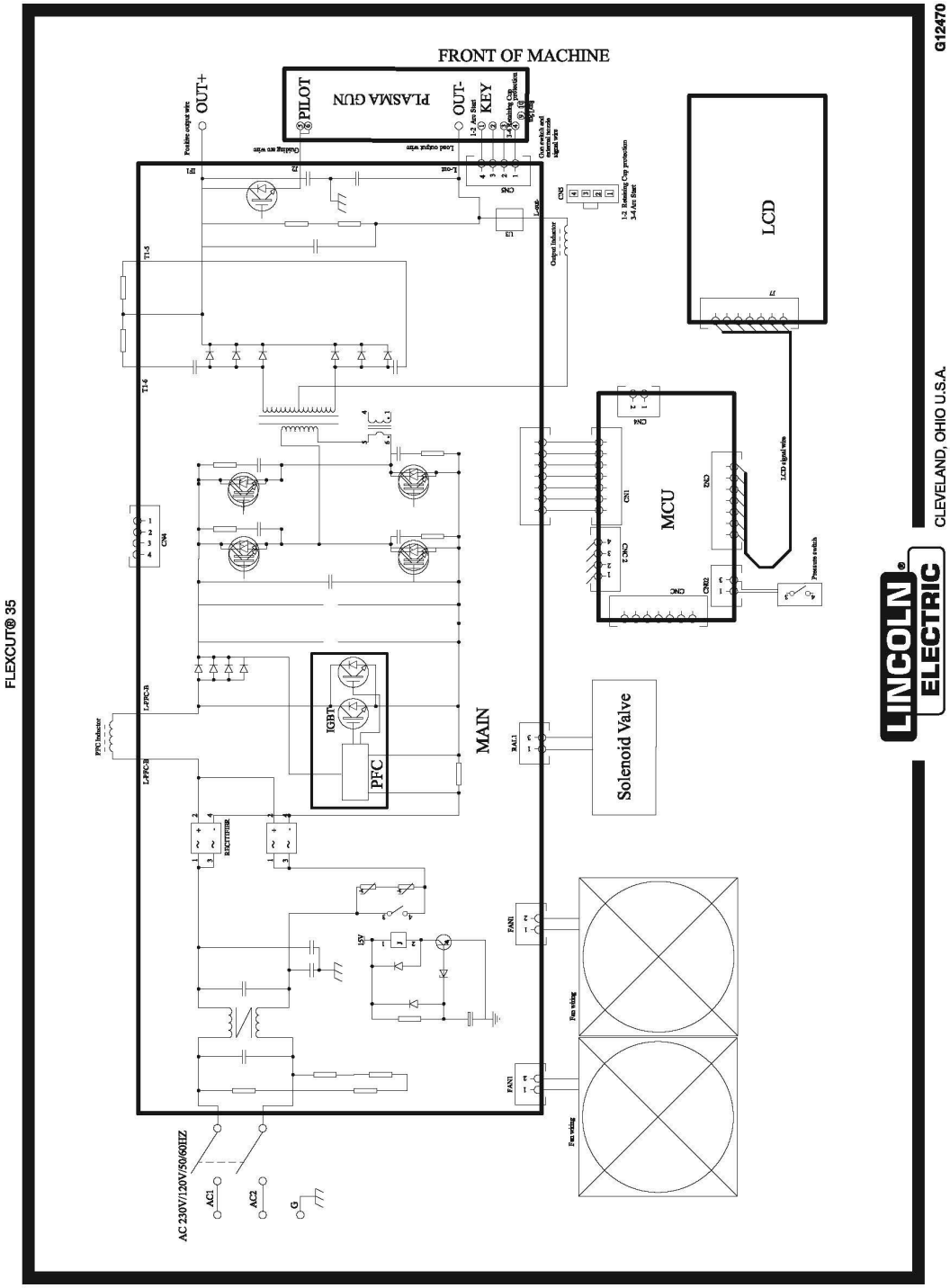

CUSTOMER ASSISTANCE POLICY

CUSTOMER ASSISTANCE POLICY

The business of Lincoln Electric is manufacturing and selling high quality welding equipment, automated welding systems, consumables, and cutting equipment. Our challenge is to meet the needs of our customers, who are experts in their fields, and to exceed their expectations. On occasion, purchasers may ask Lincoln Electric for information or technical information about their use of our products. Our employees respond to inquiries to the best of their ability based on information and specifications provided to them by the customers and the knowledge they may have concerning the application. Our employees, however, are not in a position to verify the information provided or to evaluate the engineering requirements for the particular weldment, or to provide engineering advice in relation to a specific situation or application. Accordingly, Lincoln Electric does not warrant or guarantee or assume any liability with respect to such information or communications. Moreover, the provision of such information or technical information does not create, expand, or alter any warranty on our products. Any express or implied warranty that might arise from the information or technical information, including any implied warranty of merchantability or any warranty of fitness for any customers' particular purpose or any other equivalent or similar warranty is specifically disclaimed.

Lincoln Electric is a responsive manufacturer, but the definition of specifications, and the selection and use of specific products sold by Lincoln Electric is solely within the control of, and remains the sole responsibility of the customer. Many variables beyond the control of Lincoln Electric affect the results obtained in applying these types of fabrication methods and service requirements.

WELD FUME CONTROL EQUIPMENT

The operation of welding fume control equipment is affected by various factors including proper use and positioning of the equipment, maintenance of the equipment and the specific welding procedure and application involved. Worker exposure level should be checked upon installation and periodically thereafter to be certain it is within applicable OSHA PEL and ACGIH TLV limits.

PARTS LIST

Content/Details may be changed or updated without notice. For most current Instruction Manuals, go to PARTS.LINCOLNELECTRIC.COM.