OM-261767C 2021-01

Processes

Stick (SMAW) Welding

TIG (GTAW) Welding

Description

Arc Welding Power Source

Si 160, Si 160 PFC, And STi 160

CE

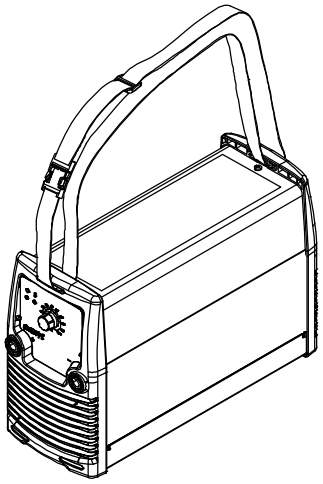

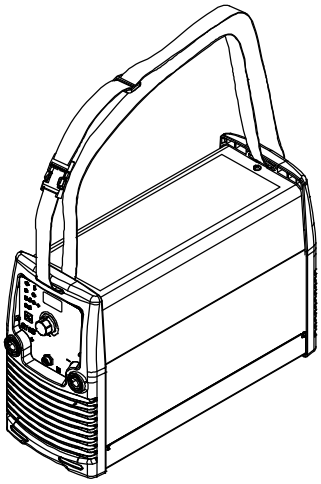

OWNER'S MANUAL

File: TIG (GTAW)

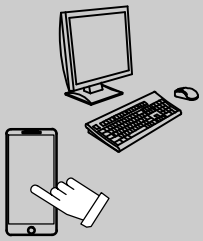

For product information, Owner's Manual translations, and more, visit

www.MillerWelds.com

From Miller to You

Thank you and *congratulations* on choosing Miller. Now you can get the job done and get it done right. We know you don't have time to do it any other way.

That's why when Niels Miller first started building arc welders in 1929, he made sure his products offered long-lasting value and superior quality. Like you, his customers couldn't afford anything less. Miller products had to be more than the best they could be. They had to be the best you could buy.

Today, the people that build and sell Miller products continue the tradition. They're just as committed to providing equipment and service that meets the high standards of quality and value established in 1929.

This Owner's Manual is designed to help you get the most out of your Miller products. Please take time to read the Safety Precautions. They will help you protect yourself against potential hazards on the worksite. We've made installation and operation quick and easy. With Miller, you can count on years of reliable service with proper maintenance. And if for some reason the unit needs repair, there's a Troubleshooting section that will help you figure out what the problem is, and our extensive service network is there to help fix the problem. Warranty and maintenance information for your particular model are also provided.

TRUE BLUE® WARRANTY

Working as hard as you do – every power source from Miller is backed by the most hassle-free warranty in the business.

Miller Electric manufactures a full line of welders and welding-related equipment. For information on other quality Miller products, contact your local Miller distributor to receive the latest full line catalog or individual catalog sheets.

Miller®

TABLE OF CONTENTS

SECTION 1 – SAFETY PRECAUTIONS - READ BEFORE USING **1**
1-1. Symbol Usage 1
1-2. Arc Welding Hazards 1
1-3. Additional Hazards For Installation, Operation, And Maintenance 3
1-4. California Proposition 65 Warnings 4
1-5. Principal Safety Standards 4
1-6. EMF Information 4
SECTION 2 – DEFINITIONS **5**
2-1. Additional Safety Symbols And Definitions 5
2-2. Miscellaneous Symbols And Definitions 6
SECTION 3 – SPECIFICATIONS **7**
3-1. Serial Number And Rating Label Location 7
3-2. Software Licensing Agreement 7
3-3. Information About Default Weld Parameters And Settings 7
3-4. Specifications 7
3-5. Environmental Specifications 8
SECTION 4 – INSTALLATION **9**
4-1. Selecting a Location 9
4-2. Volt-Ampere Curves 10
4-3. Duty Cycle And Overheating 11
4-4. Remote 6 Receptacle Information (STi Model Only) 11
4-5. Selecting Cable Sizes 12
4-6. Weld Output Terminals 12
4-7. Electrical Service Guide 13
4-8. Connecting 1-Phase Input Power 14
4-9. Connecting To 1-Phase Engine Generator w/230 Volt Output 15
SECTION 5 – OPERATION **16**
5-1. Controls (Si Models) 16
5-2. Amperage Adjustment Control 16
5-3. Preparing Unit For Stick Welding (Si Models) 17
5-4. Controls For STi 160 18
5-5. Preparing Unit For Stick Welding (STi Model) 19
5-6. Preparing Unit For TIG Welding (STi Model) 20
5-7. Resetting Unit To Factory Default Settings (STi Model Only) 21
5-8. Lift-Arc™ And HF TIG Start Procedures 21
SECTION 6 – MAINTENANCE AND TROUBLESHOOTING **22**
6-1. Routine Maintenance 22
6-2. High Temperature Help Display 22
6-3. Troubleshooting 23
SECTION 7 – ELECTRICAL DIAGRAM **24**
WARRANTY

DECLARATION OF CONFORMITY

for European Community (CE marked) products.

ITW Welding Products B.V. Edisonstraat 10, Oud-Beijerland, 3262 LD, Netherlands, declares that the product(s) identified in this declaration conform to the essential requirements and provisions of the stated Council Directive(s) and Standard(s).

Product/Apparatus Identification:

Product	Stock Number
Si 160	059016011
Si 160 PFC	059016016
Sti 160	059016012

Council Directives:

- 2014/35/EU Low voltage
- 2014/30/EU Electromagnetic compatibility
- 2015/863/EU Restriction of the use of certain hazardous substances in electrical and electronic equipment
- 2009/125/EC Ecodesign requirements for energy–related products
- 2019/1784/EU Ecodesign requirements for welding equipment

Standards:

- IEC 60974–1:2012 Arc welding equipment – Part 1: Welding power sources
- IEC 60974–10:2014 Arc welding equipment – Part 10: Electromagnetic compatibility requirements

Signatory:

2021 – 01 – 21

Pieter Keultjes

EQUIPMENT PRODUCT SPECIALIST – EMEA

Date of Declaration

EMF DATA SHEET FOR ARC WELDING POWER SOURCE

Product/Apparatus Identification

Product	Stock Number
Si 160	059016011
Si 160 PFC	059016016
STi 160	059016012

Compliance Information Summary

Applicable regulation Directive 2014/35/EU

Reference limits Directive 2013/35/EU, Recommendation 1999/51 9/EC

Applicable standards IEC 62822−1:2016, IEC 62822−2:2016

Intended use ☒ for occupational use ☐ for use by laymen

Non−thermal effects need to be considered for workplace assessment ☒ YES ☐ NO

Thermal effects need to be considered for workplace assessment ☐ YES ☒ NO

☒ Data is based on maximum power source capability (valid unless firmware/hardware is changed)

☐ Data is based on worst case setting/program (only valid until setting options/welding programs are changed)

☐ Data is based on multiple settings/programs (only valid until setting options/welding programs are changed)

Occupational exposure is below the Exposure Limit Values (ELVs) for health effects at the standardized configurations ☒ YES ☐ NO (if NO, specific required minimum distances apply)

Occupational exposure is below the Exposure Limit Values (ELVs) for sensory effects at the standardized configurations ☐ n.a ☒ YES ☐ NO (if applicable and NO, specific measures are needed)

Occupational exposure is below the Action Levels (ALs) at the standardized configurations ☐ n.a ☐ YES ☒ NO (if applicable and NO, specific signage is needed)

EMF Data for Non-thermal Effects

Exposure Indices (EIs) and distances to welding circuit (for each operation mode, as applicable)

	Head		Trunk	Limb (hand)	Limb (thigh)
	Sensory Effects	Health Effects			
Standardized distance	10 cm	10 cm	10 cm	3 cm	3 cm
ELV EI @ standardized distance	0.05	0.04	0.06	0.04	0.08
Required minimum distance	1 cm	1 cm	1 cm	1 cm	1 cm

Distance where all occupational ELV Exposure Indices fall below 0.20 (20%) 1 cm

Distance where all general public ELV Exposure Indices fall below 1.00 (100%) 35 cm

Tested by: Miller Milan Date tested: 2016−04−01

XXXXXX-A

SECTION 1 – SAFETY PRECAUTIONS - READ BEFORE USING

Protect yourself and others from injury — read, follow, and save these important safety precautions and operating instructions.

1-1. Symbol Usage

DANGER! – Indicates a hazardous situation which, if not avoided, will result in death or serious injury. The possible hazards are shown in the adjoining symbols or explained in the text.

Indicates a hazardous situation which, if not avoided, could result in death or serious injury. The possible hazards are shown in the adjoining symbols or explained in the text.

NOTICE *– Indicates statements not related to personal injury.*

☞ *Indicates special instructions.*

This group of symbols means Warning! Watch Out! ELECTRIC SHOCK, MOVING PARTS, and HOT PARTS hazards. Consult symbols and related instructions below for necessary actions to avoid these hazards.

1-2. Arc Welding Hazards

The symbols shown below are used throughout this manual to call attention to and identify possible hazards. When you see the symbol, watch out, and follow the related instructions to avoid the hazard. The safety information given below is only a summary of the more complete safety information found in the Principal Safety Standards listed in Section 1-5. Read and follow all Safety Standards.

Only qualified persons should install, operate, maintain, and repair this equipment. A qualified person is defined as one who, by possession of a recognized degree, certificate, or professional standing, or who by extensive knowledge, training and experience, has successfully demonstrated the ability to solve or resolve problems relating to the subject matter, the work, or the project and has received safety training to recognize and avoid the hazards involved.

During operation, keep everybody, especially children, away.

ELECTRIC SHOCK can kill.

Touching live electrical parts can cause fatal shocks or severe burns. The electrode and work circuit is electrically live whenever the output is on. The input power circuit and machine internal circuits are also live when power is on. In semiautomatic or automatic wire welding, the wire, wire reel, drive roll housing, and all metal parts touching the welding wire are electrically live. Incorrectly installed or improperly grounded equipment is a hazard.

- Do not touch live electrical parts.
- Wear dry, hole-free insulating gloves and body protection.
- Insulate yourself from work and ground using dry insulating mats or covers big enough to prevent any physical contact with the work or ground.
- Do not use AC weld output in damp, wet, or confined spaces, or if there is a danger of falling.
- Use AC output ONLY if required for the welding process.
- If AC output is required, use remote output control if present on unit.
- Additional safety precautions are required when any of the following electrically hazardous conditions are present: in damp locations or while wearing wet clothing; on metal structures such as floors, gratings, or scaffolds; when in cramped positions such as sitting, kneeling, or lying; or when there is a high risk of unavoidable or accidental contact with the workpiece or ground. For these conditions, use the following equipment in order presented: 1) a semiautomatic DC constant voltage (wire) welder, 2) a DC manual (stick) welder, or 3) an AC welder with reduced open-circuit voltage. In most situations, use of a DC, constant voltage wire welder is recommended. And, do not work alone!
- Disconnect input power or stop engine before installing or servicing this equipment. Lockout/tagout input power according to OSHA 29 CFR 1910.147 (see Safety Standards).
- Properly install, ground, and operate this equipment according to its Owner's Manual and national, state, and local codes.
- Always verify the supply ground – check and be sure that input power cord ground wire is properly connected to ground terminal in disconnect box or that cord plug is connected to a properly grounded receptacle outlet.
- When making input connections, attach proper grounding conductor first – double-check connections.
- Keep cords dry, free of oil and grease, and protected from hot metal and sparks.
- Frequently inspect input power cord and ground conductor for damage or bare wiring – replace immediately if damaged – bare wiring can kill.
- Turn off all equipment when not in use.
- Do not use worn, damaged, undersized, or repaired cables.
- Do not drape cables over your body.
- If earth grounding of the workpiece is required, ground it directly with a separate cable.
- Do not touch electrode if you are in contact with the work, ground, or another electrode from a different machine.
- Do not touch electrode holders connected to two welding machines at the same time since double open-circuit voltage will be present.
- Use only well-maintained equipment. Repair or replace damaged parts at once. Maintain unit according to manual.
- Wear a safety harness if working above floor level.
- Keep all panels and covers securely in place.
- Clamp work cable with good metal-to-metal contact to workpiece or worktable as near the weld as practical.
- Insulate work clamp when not connected to workpiece to prevent contact with any metal object.
- Do not connect more than one electrode or work cable to any single weld output terminal. Disconnect cable for process not in use.
- Use GFCI protection when operating auxiliary equipment in damp or wet locations.

SIGNIFICANT DC VOLTAGE exists in inverter welding power sources AFTER removal of input power.

- Turn off unit, disconnect input power, and discharge input capacitors according to instructions in Manual before touching any parts.

HOT PARTS can burn.

- Do not touch hot parts bare handed.
- Allow cooling period before working on equipment.
- To handle hot parts, use proper tools and/or wear heavy, insulated welding gloves and clothing to prevent burns.

FUMES AND GASES can be hazardous.

Welding produces fumes and gases. Breathing these fumes and gases can be hazardous to your health.

- Keep your head out of the fumes. Do not breathe the fumes.
- Ventilate the work area and/or use local forced ventilation at the arc to remove welding fumes and gases. The recommended way to determine adequate ventilation is to sample for the composition and quantity of fumes and gases to which personnel are exposed.
- If ventilation is poor, wear an approved air-supplied respirator.
- Read and understand the Safety Data Sheets (SDSs) and the manufacturer's instructions for adhesives, coatings, cleaners, consumables, coolants, degreasers, fluxes, and metals.
- Work in a confined space only if it is well ventilated, or while wearing an air-supplied respirator. Always have a trained watchperson nearby. Welding fumes and gases can displace air and lower the oxygen level causing injury or death. Be sure the breathing air is safe.
- Do not weld in locations near degreasing, cleaning, or spraying operations. The heat and rays of the arc can react with vapors to form highly toxic and irritating gases.
- Do not weld on coated metals, such as galvanized, lead, or cadmium plated steel, unless the coating is removed from the weld area, the area is well ventilated, and while wearing an air-supplied respirator. The coatings and any metals containing these elements can give off toxic fumes if welded.

ARC RAYS can burn eyes and skin.

Arc rays from the welding process produce intense visible and invisible (ultraviolet and infrared) rays that can burn eyes and skin. Sparks fly off from the weld.

- Wear an approved welding helmet fitted with a proper shade of filter lenses to protect your face and eyes from arc rays and sparks when welding or watching (see ANSI Z49.1 and Z87.1 listed in Safety Standards).
- Wear approved safety glasses with side shields under your helmet.
- Use protective screens or barriers to protect others from flash, glare and sparks; warn others not to watch the arc.
- Wear body protection made from durable, flame–resistant material (leather, heavy cotton, wool). Body protection includes oil-free clothing such as leather gloves, heavy shirt, cuffless trousers, high shoes, and a cap.

WELDING can cause fire or explosion.

Welding on closed containers, such as tanks, drums, or pipes, can cause them to blow up. Sparks can fly off from the welding arc. The flying sparks, hot workpiece, and hot equipment can cause fires and burns. Accidental contact of electrode to metal objects can cause sparks, explosion, overheating, or fire. Check and be sure the area is safe before doing any welding.

- Remove all flammables within 35 ft (10.7 m) of the welding arc. If this is not possible, tightly cover them with approved covers.
- Do not weld where flying sparks can strike flammable material.
- Protect yourself and others from flying sparks and hot metal.
- Be alert that welding sparks and hot materials from welding can easily go through small cracks and openings to adjacent areas.
- Watch for fire, and keep a fire extinguisher nearby.
- Be aware that welding on a ceiling, floor, bulkhead, or partition can cause fire on the hidden side.
- Do not cut or weld on tire rims or wheels. Tires can explode if heated. Repaired rims and wheels can fail. See OSHA 29 CFR 1910.177 listed in Safety Standards.
- Do not weld on containers that have held combustibles, or on closed containers such as tanks, drums, or pipes unless they are properly prepared according to AWS F4.1 and AWS A6.0 (see Safety Standards).
- Do not weld where the atmosphere can contain flammable dust, gas, or liquid vapors (such as gasoline).
- Connect work cable to the work as close to the welding area as practical to prevent welding current from traveling long, possibly unknown paths and causing electric shock, sparks, and fire hazards.
- Do not use welder to thaw frozen pipes.
- Remove stick electrode from holder or cut off welding wire at contact tip when not in use.
- Wear body protection made from durable, flame–resistant material (leather, heavy cotton, wool). Body protection includes oil-free clothing such as leather gloves, heavy shirt, cuffless trousers, high shoes, and a cap.
- Remove any combustibles, such as a butane lighter or matches, from your person before doing any welding.
- After completion of work, inspect area to ensure it is free of sparks, glowing embers, and flames.
- Use only correct fuses or circuit breakers. Do not oversize or bypass them.
- Follow requirements in OSHA 1910.252 (a) (2) (iv) and NFPA 51B for hot work and have a fire watcher and extinguisher nearby.
- Read and understand the Safety Data Sheets (SDSs) and the manufacturer's instructions for adhesives, coatings, cleaners, consumables, coolants, degreasers, fluxes, and metals.

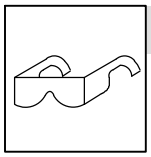

FLYING METAL or DIRT can injure eyes.

- Welding, chipping, wire brushing, and grinding cause sparks and flying metal. As welds cool, they can throw off slag.
- Wear approved safety glasses with side shields even under your welding helmet.

BUILDUP OF GAS can injure or kill.

- Shut off compressed gas supply when not in use.
- Always ventilate confined spaces or use approved air-supplied respirator.

ELECTRIC AND MAGNETIC FIELDS (EMF) can affect Implanted Medical Devices.

- Wearers of Pacemakers and other Implanted Medical Devices should keep away.
- Implanted Medical Device wearers should consult their doctor and the device manufacturer before going near arc welding, spot welding, gouging, plasma arc cutting, or induction heating operations.

NOISE can damage hearing.

Noise from some processes or equipment can damage hearing.

- Wear approved ear protection if noise level is high.

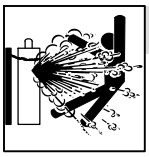

CYLINDERS can explode if damaged.

Compressed gas cylinders contain gas under high pressure. If damaged, a cylinder can explode. Since gas cylinders are normally part of the welding process, be sure to treat them carefully.

- Protect compressed gas cylinders from excessive heat, mechanical shocks, physical damage, slag, open flames, sparks, and arcs.
- Install cylinders in an upright position by securing to a stationary support or cylinder rack to prevent falling or tipping.
- Keep cylinders away from any welding or other electrical circuits.
- Never drape a welding torch over a gas cylinder.
- Never allow a welding electrode to touch any cylinder.
- Never weld on a pressurized cylinder – explosion will result.
- Use only correct compressed gas cylinders, regulators, hoses, and fittings designed for the specific application; maintain them and associated parts in good condition.
- Turn face away from valve outlet when opening cylinder valve. Do not stand in front of or behind the regulator when opening the valve.
- Keep protective cap in place over valve except when cylinder is in use or connected for use.
- Use the proper equipment, correct procedures, and sufficient number of persons to lift, move, and transport cylinders.
- Read and follow instructions on compressed gas cylinders, associated equipment, and Compressed Gas Association (CGA) publication P-1 listed in Safety Standards.

1-3. Additional Hazards For Installation, Operation, And Maintenance

FIRE OR EXPLOSION hazard.

- Do not install or place unit on, over, or near combustible surfaces.
- Do not install unit near flammables.
- Do not overload building wiring – be sure power supply system is properly sized, rated, and protected to handle this unit.

FALLING EQUIPMENT can injure.

- Use lifting eye to lift unit only, NOT running gear, gas cylinders, or any other accessories.
- Use correct procedures and equipment of adequate capacity to lift and support unit.
- If using lift forks to move unit, be sure forks are long enough to extend beyond opposite side of unit.
- Keep equipment (cables and cords) away from moving vehicles when working from an aerial location.
- Follow the guidelines in the Applications Manual for the Revised NIOSH Lifting Equation (Publication No. 94–110) when manually lifting heavy parts or equipment.

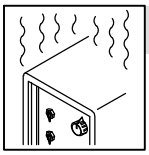

OVERUSE can cause OVERHEATING

- Allow cooling period; follow rated duty cycle.
- Reduce current or reduce duty cycle before starting to weld again.
- Do not block or filter airflow to unit.

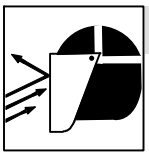

FLYING SPARKS can injure.

- Wear a face shield to protect eyes and face.
- Shape tungsten electrode only on grinder with proper guards in a safe location wearing proper face, hand, and body protection.
- Sparks can cause fires — keep flammables away.

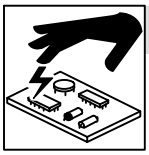

STATIC (ESD) can damage PC boards.

- Put on grounded wrist strap BEFORE handling boards or parts.
- Use proper static-proof bags and boxes to store, move, or ship PC boards.

MOVING PARTS can injure.

- Keep away from moving parts.
- Keep away from pinch points such as drive rolls.

WELDING WIRE can injure.

- Do not press gun trigger until instructed to do so.
- Do not point gun toward any part of the body, other people, or any metal when threading welding wire.

BATTERY EXPLOSION can injure.

- Do not use welder to charge batteries or jump start vehicles unless it has a battery charging feature designed for this purpose.

MOVING PARTS can injure.

- Keep away from moving parts such as fans.
- Keep all doors, panels, covers, and guards closed and securely in place.
- Have only qualified persons remove doors, panels, covers, or guards for maintenance and troubleshooting as necessary.
- Reinstall doors, panels, covers, or guards when maintenance is finished and before reconnecting input power.

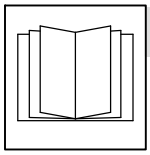

READ INSTRUCTIONS.

- Read and follow all labels and the Owner's Manual carefully before installing, operating, or servicing unit. Read the safety information at the beginning of the manual and in each section.
- Use only genuine replacement parts from the manufacturer.
- Perform installation, maintenance, and service according to the Owner's Manuals, industry standards, and national, state, and local codes.

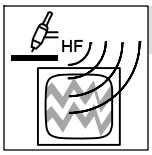

H.F. RADIATION can cause interference.

- High-frequency (H.F.) can interfere with radio navigation, safety services, computers, and communications equipment.

- Have only qualified persons familiar with electronic equipment perform this installation.
- The user is responsible for having a qualified electrician promptly correct any interference problem resulting from the installation.
- If notified by the FCC about interference, stop using the equipment at once.
- Have the installation regularly checked and maintained.
- Keep high-frequency source doors and panels tightly shut, keep spark gaps at correct setting, and use grounding and shielding to minimize the possibility of interference.

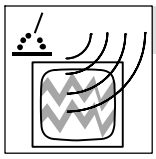

ARC WELDING can cause interference.

- Electromagnetic energy can interfere with sensitive electronic equipment such as computers and computer-driven equipment such as robots.

- Be sure all equipment in the welding area is electromagnetically compatible.
- To reduce possible interference, keep weld cables as short as possible, close together, and down low, such as on the floor.
- Locate welding operation 100 meters from any sensitive electronic equipment.
- Be sure this welding machine is installed and grounded according to this manual.
- If interference still occurs, the user must take extra measures such as moving the welding machine, using shielded cables, using line filters, or shielding the work area.

1-4. California Proposition 65 Warnings

WARNING: This product can expose you to chemicals including lead, which are known to the state of California to cause cancer and birth defects or other reproductive harm.

For more information, go to www.P65Warnings.ca.gov.

1-5. Principal Safety Standards

Safety in Welding, Cutting, and Allied Processes, American Welding Society standard ANSI Standard Z49.1. Website: www.aws.org.

Safe Practice For Occupational And Educational Eye And Face Protection, ANSI Standard Z87.1 from American National Standards Institute. Website: www.ansi.org.

Safe Practices for the Preparation of Containers and Piping for Welding and Cutting, American Welding Society Standard AWS F4.1 from Global Engineering Documents. Website: www.global.ihs.com.

Safe Practices for Welding and Cutting Containers that have Held Combustibles, American Welding Society Standard AWS A6.0 from Global Engineering Documents. Website: www.global.ihs.com.

National Electrical Code, NFPA Standard 70 from National Fire Protection Association. Website: www.nfpa.org and www. sparky.org.

Safe Handling of Compressed Gases in Cylinders, CGA Pamphlet P-1 from Compressed Gas Association. Website:www.cganet.com.

Safety in Welding, Cutting, and Allied Processes, CSA Standard W117.2 from Canadian Standards Association. Website: www.csagroup.org.

Standard for Fire Prevention During Welding, Cutting, and Other Hot Work, NFPA Standard 51B from National Fire Protection Association. Website: www.nfpa.org.

OSHA *Occupational Safety and Health Standards for General Industry*, Title 29, Code of Federal Regulations (CFR), Part 1910.177 Subpart N, Part 1910 Subpart Q, and Part 1926, Subpart J. Website: www.osha.gov.

OSHA *Important Note Regarding the ACGIH TLV, Policy Statement on the Uses of TLVs and BEIs.* Website: www.osha.gov.

Applications Manual for the Revised NIOSH Lifting Equation from the National Institute for Occupational Safety and Health (NIOSH). Website: www.cdc.gov/NIOSH.

1-6. EMF Information

Electric current flowing through any conductor causes localized electric and magnetic fields (EMF). The current from arc welding (and allied processes including spot welding, gouging, plasma arc cutting, and induction heating operations) creates an EMF field around the welding circuit. EMF fields can interfere with some medical implants, e.g. pacemakers. Protective measures for persons wearing medical implants have to be taken. For example, restrict access for passers–by or conduct individual risk assessment for welders. All welders should use the following procedures in order to minimize exposure to EMF fields from the welding circuit:

1. Keep cables close together by twisting or taping them, or using a cable cover.
2. Do not place your body between welding cables. Arrange cables to one side and away from the operator.
3. Do not coil or drape cables around your body.
4. Keep head and trunk as far away from the equipment in the welding circuit as possible.
5. Connect work clamp to workpiece as close to the weld as possible.
6. Do not work next to, sit or lean on the welding power source.
7. Do not weld whilst carrying the welding power source or wire feeder.

About Implanted Medical Devices:

Implanted Medical Device wearers should consult their doctor and the device manufacturer before performing or going near arc welding, spot welding, gouging, plasma arc cutting, or induction heating operations. If cleared by your doctor, then following the above procedures is recommended.

SECTION 2 – DEFINITIONS

2-1. Additional Safety Symbols And Definitions

	Warning! Watch Out! There are possible hazards as shown by the symbols. Safe1 2012–05
	Do not discard product (where applicable) with general waste. Reuse or recycle Waste Electrical and Electronic Equipment (WEEE) by disposing at a designated collection facility. Contact your local recycling office or your local distributor for further information. Safe37 2017–04
	Wear dry insulating gloves. Do not touch electrode with bare hand. Do not wear wet or damaged gloves. Safe2 2017–04
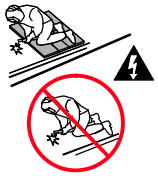	Protect yourself from electric shock by insulating yourself from work and ground. Safe3 2017–04
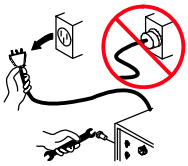	Disconnect input plug or power before working on machine. Safe5 2017–04
	Keep your head out of the fumes. Safe6 2017–04
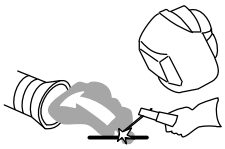	Use forced ventilation or local exhaust to remove the fumes. Safe8 2012–05
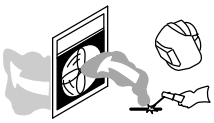	Use ventilating fan to remove fumes. Safe10 2012–05
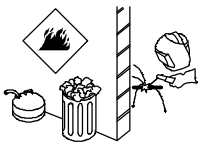	Keep flammables away from welding. Do not weld near flammables. Safe12 2012–05
	Welding sparks can cause fires. Have a fire extinguisher nearby, and have a watchperson ready to use it. Safe14 2012–05

	Do not weld on drums or any closed containers. Safe16 2017–04
	Do not remove or paint over (cover) the label. Safe20 2017–04
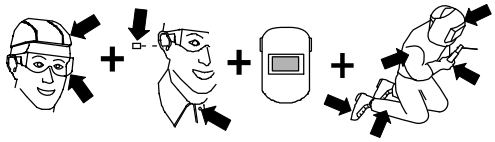	Wear hat and safety glasses. Use ear protection and button shirt collar. Use welding helmet with correct shade of filter. Wear complete body protection. Safe38 2012–05
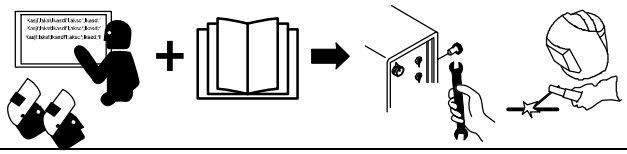	Become trained and read the instructions before working on the machine or welding. Safe40 2012–05

2-2. Miscellaneous Symbols And Definitions

A	Amperage
V	Voltage Input
S	Suitable For Areas Of Increased Shock Hazard
	Shielded Metal Arc Welding (SMAW)
V	Voltage
	Increase/Decrease Of Quantity (Rotating)
	Single Phase Static Frequency Converter-Transformer-Rectifier
	Output
—	Negative
+	Positive
Hz	Hertz

	Gas Input
	Temperature Indication
⎓	Direct Current
	Line Connection
%	Percent
X	Duty Cycle
U_1	Primary Voltage
U_2	Conventional Load Voltage
∿	Alternating Current (AC)
U_0	Rated No Load Voltage (Average)
I_{1max}	Rated Maximum Supply Current

I_2	Rated Welding Current
I_{1eff}	Maximum Effective Supply Current
	Remote
	Arc Striking with Contact (LiftArc)
	Gas Tungsten Arc Welding (GTAW)
	Process
1∿	Single Phase
	Set-Up
I	On
O	Off
	Look under unit for label

SECTION 3 – SPECIFICATIONS

3-1. Serial Number And Rating Label Location

The serial number and rating information is located on the bottom of the machine. Use the rating labels to determine input power requirements and/or rated output. CE model rating labels will also display the following symbols: CE, CCC, WEEE, and IEC 60974-1. For future reference, write serial number in space provided on back cover of this manual.

3-2. Software Licensing Agreement

The End User License Agreement and any third-party notices and terms and conditions pertaining to third-party software can be found at https://www.millerwelds.com/eula and are incorporated by reference herein.

3-3. Information About Default Weld Parameters And Settings

NOTICE *– Each welding application is unique. Although certain Miller Electric products are designed to determine and default to certain typical welding parameters and settings based upon specific and relatively limited application variables input by the end user, such default settings are for reference purposes only; and final weld results can be affected by other variables and application-specific circumstances. The appropriateness of all parameters and settings should be evaluated and modified by the end user as necessary based upon application-specific requirements. The end user is solely responsible for selection and coordination of appropriate equipment, adoption or adjustment of default weld parameters and settings, and ultimate quality and durability of all resultant welds. Miller Electric expressly disclaims any and all implied warranties including any implied warranty of fitness for a particular purpose.*

3-4. Specifications

☞ *Do not use information in unit specifications table to determine electrical service requirements. See Sections 4-7 and 4-8 for information on connecting input power.*

☞ *This equipment will deliver rated output at an ambient air temperature up to 104 °F (40 °C).*

Model	Input Power Single-Phase AC	Rated Welding Output	Welding Amperage Range	Max OCV DC (Uo)	Amperes Input At Rated Load Output, 50/60Hz, Single-Phase	KVA/KW At Duty Cycle	Weight	Dimensions (mm)
Si 160	230 Volts Stick	100A @ 24 Volts DC, 100% Duty Cycle	15–150A	85V	20A	4.5/2.8	5.2 Kg (11.5 lb)	L = 380 mm W = 145 mm H = 245 mm
		150A @ 26 Volts DC, 25% Duty Cycle			30A	7.0/4.8		
	230 Volts TIG	100A @ 14 Volts DC, 100% Duty Cycle	15–150A	85V	13A	3.0/2.0		
		150A @ 16 Volts DC, 25% Duty Cycle			21A	4.8/3.2		
Si 160 PFC	230 Volts Stick	100A @ 24 Volts DC, 100% Duty Cycle	4–150A	70V	13.7A	3.1/2.8	6.2 Kg (13.7 lb)	L = 380 mm W = 145 mm H = 245 mm
		150A @ 26 Volts DC, 25% Duty Cycle			22.1A	5.0/4.8		
	230 Volts TIG	100A @ 14 Volts DC, 100% Duty Cycle	4–160A	70V	13A	3.0/2.0		
		160A @ 16.4 Volts DC, 20% Duty Cycle			22A	5.1/3.5		
STi 160	230 Volts Stick	100A @ 24 Volts DC, 100% Duty Cycle	4–150A	70V	20A	4.5/2.8	6.0 Kg (13.2 lb)	L = 380 mm W = 145 mm H = 245 mm
		150A @ 26 Volts DC, 25% Duty Cycle			30A	7.0/4.8		
	230 Volts TIG	100A @ 14 Volts DC, 100% Duty Cycle	4–160A	70V	13A	3.0/2.0		
		160A @ 16.4 Volts DC, 20% Duty Cycle			22A	5.1/3.5		

3-5. Environmental Specifications

A. IP Rating

IP23S

This equipment is designed for outdoor use. It may be stored, but is not intended to be used outside during precipitation unless sheltered.

IP23S 2014–06

B. Temperature Specifications

Operating Temperature Range*	Storage/Transportation Temperature Range
–10 to 40°C (14 to 104°F) *Output is derated at temperatures above 40°C (104°F).	–20 to 55°C (–4 to 131°F) Temp_2016-07

C. Information On Electromagnetic Compatibility (EMC) For Si 160 And STi 160 Models

This Class A equipment is not intended for use in residential locations where the electrical power is provided by the public low voltage supply system. There can be potential difficulties in ensuring electromagnetic compatibility in those locations, due to conducted as well as radiated disturbances.

This equipment does not comply with IEC 61000–3–12. If it is connected to a public low voltage system, it is the responsibility of the installer or user of the equipment to ensure, by consultation with the distribution network operator if necessary, that the equipment can be connected. IEC/TS 61000-3-4 can be used to guide parties concerned by the installation of arc welding equipment with an input current greater than 16 A in a low voltage network.

ce-emc 2 2014-07

D. Information On Electromagnetic Compatibility (EMC) For Si 160 PFC Model

This Class A equipment is not intended for use in residential locations where the electrical power is provided by the public low–voltage supply system. There can be potential difficulties in ensuring electromagnetic compatibility in those locations, due to conducted as well as radiated disturbances.

This equipment complies with IEC 61000-3-11 and IEC 61000-3-12.

ce-emc 4 2014-07

E. EU Ecodesign Information

Model	Input	Minimum Power Source Efficiency	Maximum Idle State Power Consumption
Si 160	230V Single Phase	80.0 %	67.0 W
Si 160 PFC	230V Single Phase	81.0 %	103.5 W
STi 160 (MMA)	230V Single Phase	83.0 %	35.0 W
STi 160 (TIG)	230V Single Phase	75.0 %	10.0 W

Do not discard product (where applicable) with general waste.

Reuse or recycle Waste Electrical and Electronic Equipment (WEEE) by disposing at a designated collection facility.

Contact your local recycling office or your local distributor for further information.

Critical raw materials possibly present in indicative amounts higher than 1 gram at component level

Component	Critical Raw Material
Printed circuit boards	Baryte, Bismuth, Cobalt, Gallium, Germanium, Hafnium, Indium, Heavy Rare Earth, Light Rare Earth, Niobium, Platinum Group Metals, Scandium, Silicon Metal, Tantalum, Vanadium
Plastic components	Antimony, Baryte
Electrical and electronic components	Antimony, Beryllium, Magnesium
Metal components	Beryllium, Cobalt, Magnesium, Tungsten, Vanadium
Cables and cable assemblies	Borate, Antimony, Baryte, Beryllium, Magnesium
Display panels	Gallium, Indium, Heavy Rare Earth, Light Rare Earth,Niobium, Platinum Group Metals, Scandium
Batteries	Fluorspar, Heavy Rare Earth, Light Rare Earth, Magnesium

EU Eco 2020-08

4-1. Selecting a Location

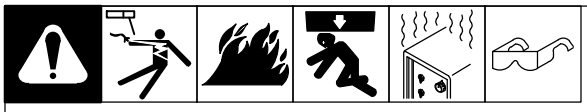

Movement

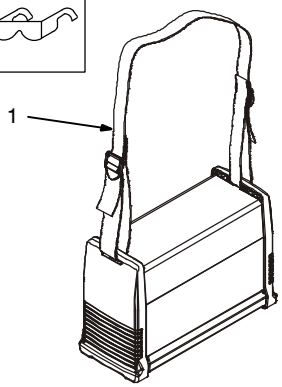

Do not move or operate unit where it could tip.

Location And Airflow

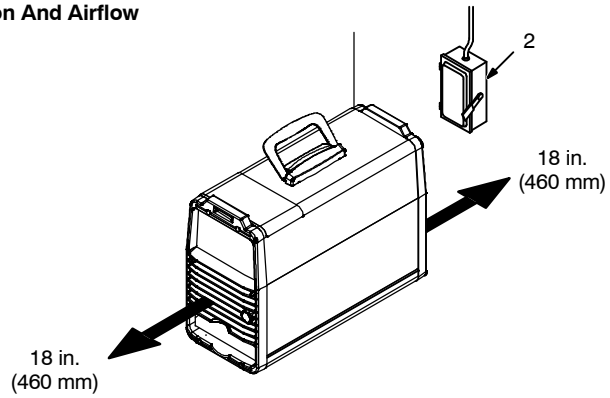

Special installation may be required where gasoline or volatile liquids are present – see NEC Article 511 or CEC Section 20.

1 Shoulder Strap

Use strap to lift unit.

2 Line Disconnect Device

Locate unit near correct input power supply.

loc_small 2018-08

Notes

4-2. Volt-Ampere Curves

Volt-ampere curves show minimum and maximum voltage and amperage output capabilities of welding power source. Curves of other settings fall between curves shown.

Si160MaxOutput – 150A;Si160MinOutput – 15A

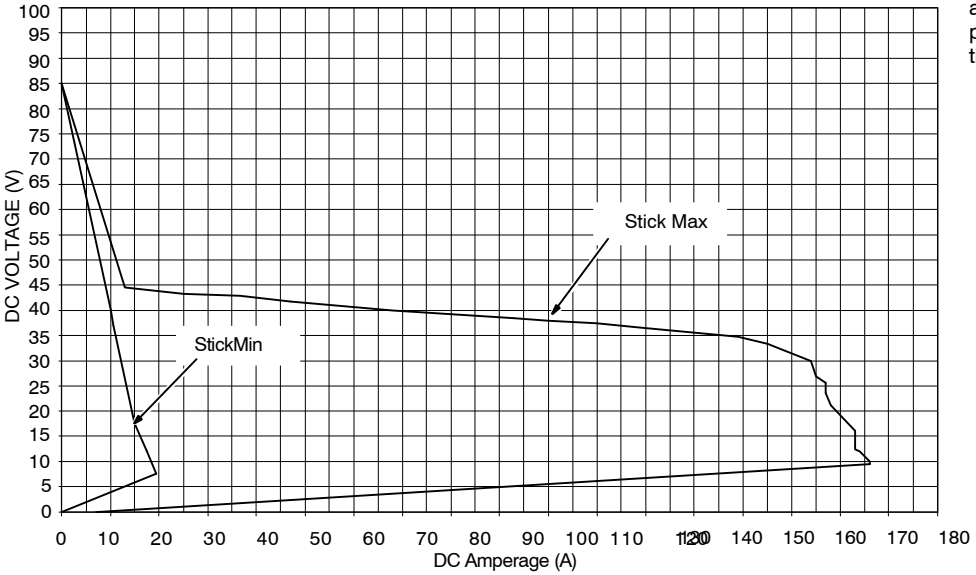

Si160PFCMaxOutput – 150A;Si160PFCMinOutput – 15A

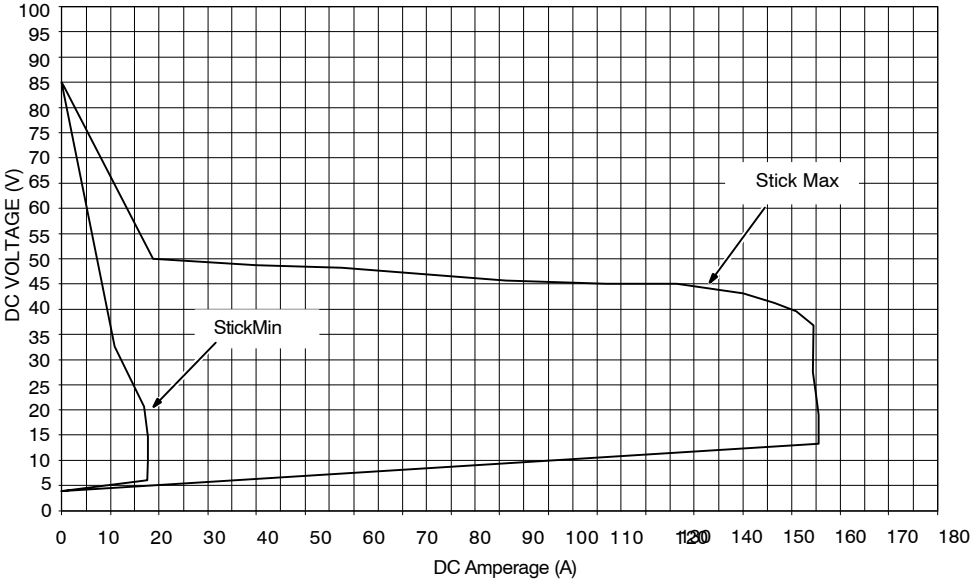

Sti160 MaxOutput–160A;Sti160 MinOutput–4A

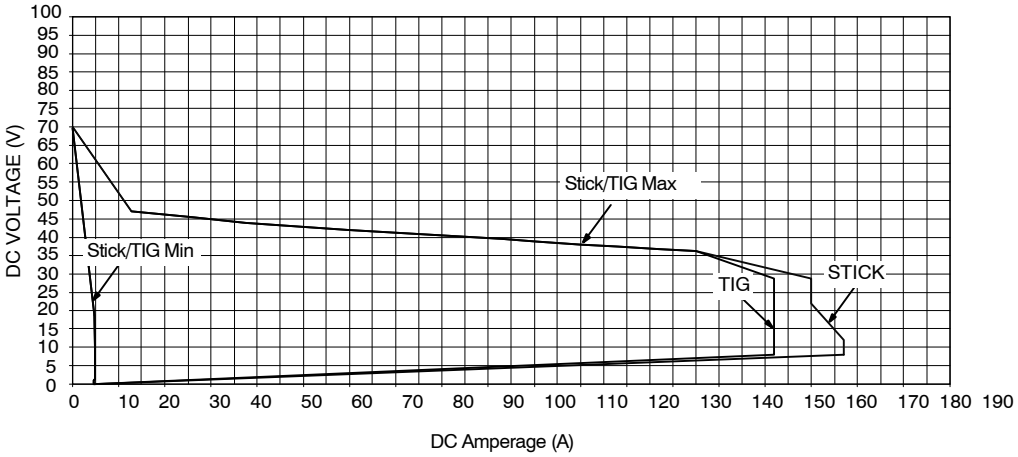

4-3. Duty Cycle And Overheating

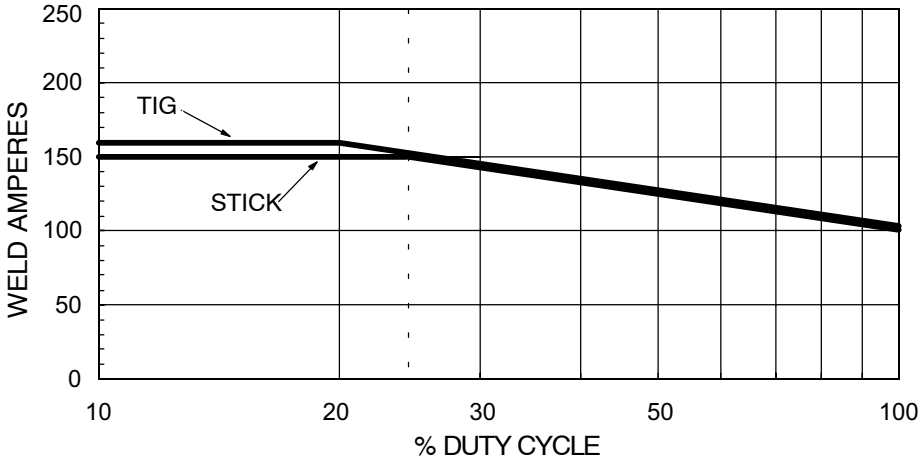

Duty Cycle is percentage of 10 minutes that unit can weld at rated load without overheating.

If unit overheats, output stops, the Overtemperature Light comes On, and the cooling fan runs. Wait fifteen minutes for unit to cool. Reduce amperage or duty cycle before starting to weld again.

NOTICE *– Exceeding duty cycle can damage unit and void warranty.*

4-4. Remote 6 Receptacle Information (STi Model Only)

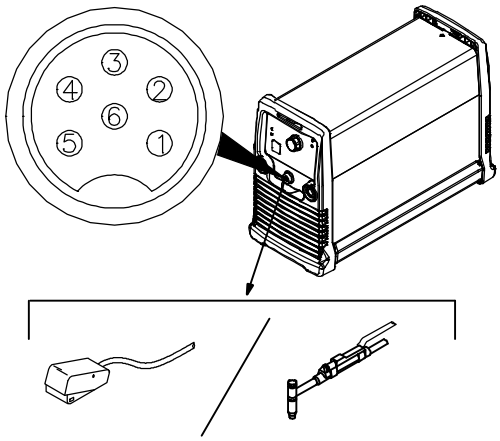

REMOTE 6	Socket	Socket Information
15 VOLTS DC OUTPUT CONTACTOR	1	Contactor control +13.8 volts DC.
	2	Contact closure to 1 completes contactor control circuit and enables output when Lift-Arc TIG remote is selected.
REMOTE OUTPUT CONTROL	3	Output to remote control; +10 volts DC output to remote control.
	4	0 to +10 volts DC input command signal from remote control.
	5	Remote control circuit common.
CHASSIS	6	Chassis common.

4-5. Selecting Cable Sizes*

NOTICE *– The Total Cable Length in Weld Circuit (see table below) is the combined length of both weld cables. For example, if the power source is 30 m (100 ft) from the workpiece, the total cable length in the weld circuit is 60 m (2 cables x 30 m). Use the 60 m (200 ft) column to determine cable size.*

Welding Amperes	Weld Cable Size** and Total Cable (Copper) Length in Weld Circuit Not Exceeding***							
	30 m (100 ft) or Less		45 m (150 ft)	60 m (200 ft)	70 m (250 ft)	90 m (300 ft)	105 m (350 ft)	120 m (400 ft)
	10 – 60% Duty Cycle mm² (AWG)	60 – 100% Duty Cycle mm² (AWG)	10 – 100% Duty Cycle mm² (AWG)					
100	20 (4)	20 (4)	20 (4)	30 (3)	35 (2)	50 (1)	60 (1/0)	60 (1/0)
150	30 (3)	30 (3)	35 (2)	50 (1)	60 (1/0)	70 (2/0)	95 (3/0)	95 (3/0)
200	30 (3)	35 (2)	50 (1)	60 (1/0)	70 (2/0)	95 (3/0)	120 (4/0)	120 (4/0)

* This chart is a general guideline and may not suit all applications. If cable overheats, use next size larger cable.

**Weld cable size is based on either a 4 volts or less drop or a current density of at least 300 circular mils per ampere.

***For distances longer than those shown in this guide, see AWS Fact Sheet No. 39, Welding Cables, available from the American Welding Society at http://www.aws.org.

Milan Ref. S-0007-M 2017–08

4-6. Weld Output Terminals

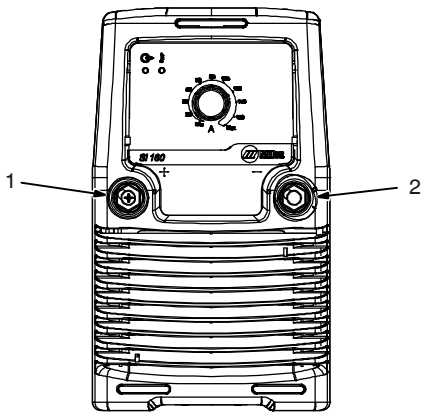

Turn off power before connecting to weld output terminals.

Do not use worn, damaged, undersized, or repaired cables.

1 Positive (+) Weld Output Terminal

2 Negative (–) Weld Output Terminal

956142809_3-6_D

output term1 2015–02

4-7. Electrical Service Guide

Elec Serv 2014-01

Failure to follow these electrical service guide recommendations could create an electric shock or fire hazard. These recommendations are for a dedicated circuit sized for the rated output and duty cycle of the welding power source.

In dedicated circuit installations, the National Electrical Code (NEC) allows the receptacle or conductor rating to be less than the rating of the circuit protection device. All components of the circuit must be physically compatible. See NEC articles 210.21, 630.11, and 630.12.

	Si 160	STi 160	Si 160 PCF
Input Voltage (V)	230	230	230
Input Amperes (A) At Rated Output	30	30	22
Max Recommended Standard Fuse Rating In Amperes [1]			
Time-Delay Fuses [2]	35	35	25
Normal Operating Fuses [3]	45	45	30
Min Input Conductor Size In mm^2 (AWG) [4]	4 (12)	4 (12)	2.5 (14)
Max Recommended Input Conductor Length In Meters (Feet)	24 (80)	24 (80)	16 (53)
Min Grounding Conductor Size In mm^2 (AWG) [4]	4 (12)	4 (12)	2.5 (14)

Reference: 2014 National Electrical Code (NEC) (including article 630)

1 If a circuit breaker is used in place of a fuse, choose a circuit breaker with time-current curves comparable to the recommended fuse.

2 “Time-Delay” fuses are UL class “RK5” . See UL 248.

3 “Normal Operating” (general purpose - no intentional delay) fuses are UL class “K5” (up to and including 60 amps), and UL class “H” (65 amps and above).

4 Conductor data in this section specifies conductor size (excluding flexible cord or cable) between the panelboard and the equipment per NEC Table 310.15 (B)(16). If a flexible cord or cable is used, minimum conductor size may increase. See NEC Table 400.5(A) for flexible cord and cable requirements.

Notes

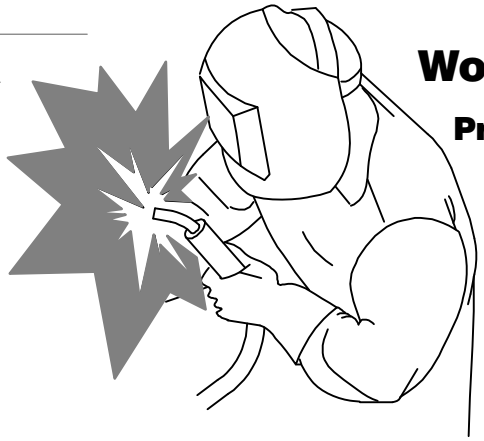

Work like a Pro!

Pros weld and cut safely. Read the safety rules at the beginning of this manual.

4-8. Connecting 1-Phase Input Power

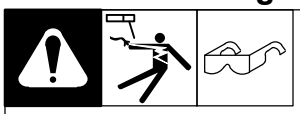

=GND/PE Earth Ground

3

7

2

4

6

L1
L2
5

1

Tools Needed:

input4 2012–05 – 956172002_3-A / 956172002_4-A

4-8. Connecting 1-Phase Input Power (Continued)

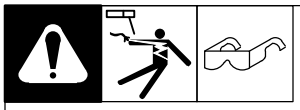

Installation must meet all National and Local Codes – have only qualified persons make this installation.

Disconnect and lockout/tagout input power before connecting input conductors from unit. Follow established procedures regarding the installation and removal of lockout/tagout devices.

Always connect green or green/yellow conductor to supply grounding terminal first, and never to a line terminal.

☞ *See Section 4-9 for information on connecting unit to an engine generator.*

See rating label on unit and check input voltage available at site.

1 Input Power Cord

2 Disconnect Device (switch shown in the OFF position)

3 Disconnect Device Grounding Terminal

4 Disconnect Device Line Terminals

5 Black And White Input Conductor (L1 And L2)

6 Green Or Green/Yellow Grounding Conductor

Connect green or green/yellow grounding conductor to disconnect device grounding terminal first.

Connect input conductors L1 and L2 to disconnect device line terminals.

7 Over-Current Protection

Select type and size of over-current protection using Section 4-7 (fused disconnect switch shown).

Close and secure door on disconnect device. Follow established lockout/tagout procedures to put unit in service.

input4 2012–05 – 803766-C

4-9. Connecting To 1-Phase Engine Generator w/230 Volt Output

Installation must meet all National and Local Codes – have only qualified persons make this installation.

☞ *Obtain a 230 volt plug that matches the receptacle on the engine generator. Install the plug on the cord of the welding power source according to the plug manufacturer's instructions.*

Generator Requirements

- Engine generator must provide the correct input amperage (see Section 4-7).
- Peak voltage must be less than 423 volts AC
- RMS voltage must be greater than 180 volts AC.
- Frequency must be between 50 and 60 Hz

NOTICE *– Make sure welding power source is off during engine generator start-up. Do not turn on the welding power source until the generator has reached normal operating speed.*

5-1. Controls (Si Models)

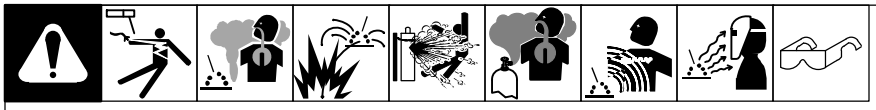

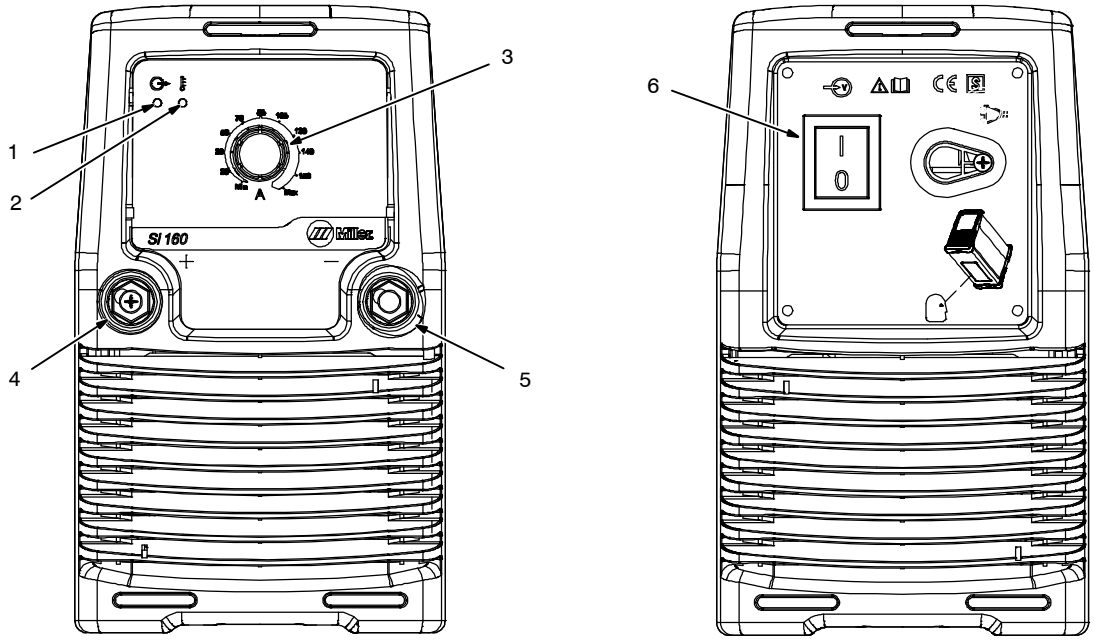

956142809_3-6_D

Weld output terminals are energized when power is On and Ready Light (LED) is lit.

1 Ready Light (LED)

Light comes on approximately two seconds after power switch is placed in On (I) position if Stick has been selected. The light indicates that the unit is energized and ready for welding.

2 High Temperature Light (LED)

Light comes on if unit overheats. Welding can resume when unit has cooled (see Section 4-3).

3 Amperage Adjustment Control

See Section 5-2.

4 Positive Weld Output Receptacle

For Stick welding, connect electrode cable to this receptacle.

5 Negative Weld Output Receptacle

For Stick welding, connect work cable to this receptacle.

6 Power Switch

Place switch in On (I) position to turn unit on. Place switch in Off (0) position to turn unit off.

5-2. Amperage Adjustment Control

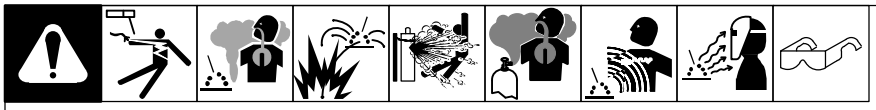

1 Amperage Adjustment Control

Rotate knob clockwise to increase amperage (Min – Max).

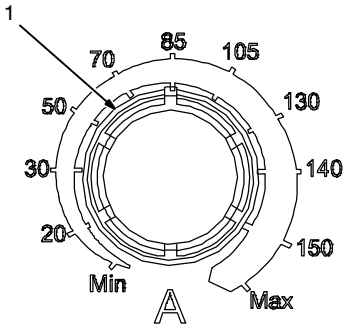

5-3. Preparing Unit For Stick Welding (Si Models)

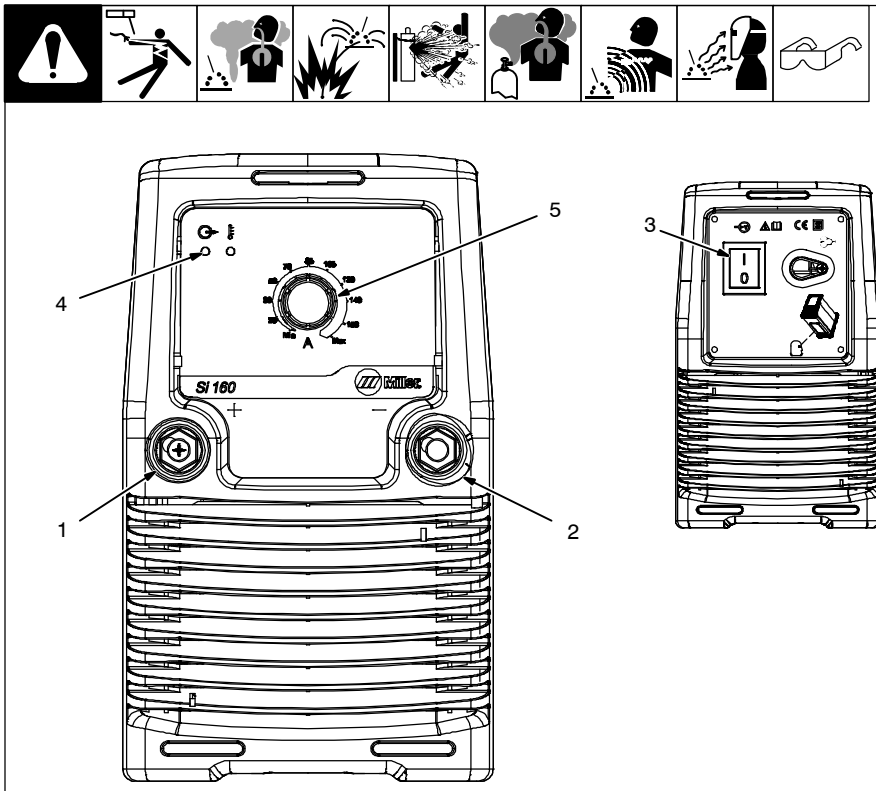

Weld output terminals are energized when power is On, and Ready Light is lit.

1 Positive Weld Output Receptacle

Connect electrode cable to this receptacle.

2 Negative Weld Output Receptacle

Connect work cable to this receptacle.

3 Power Switch

Place switch in On (I) position.

4 Ready Light (LED)

Allow time for unit to complete its start up cycle. Light comes on approximately two seconds after power switch is placed in On (I) position. The light indicates that the unit is energized and ready for welding.

5 Amperage Adjustment Control

Set amperage, see Section 5-2.

956142809_3-6_D

Notes

5-4. Controls For STi 160

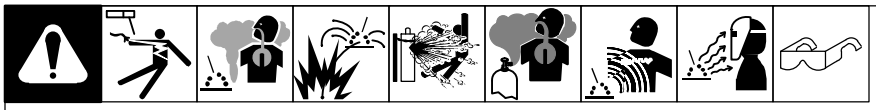

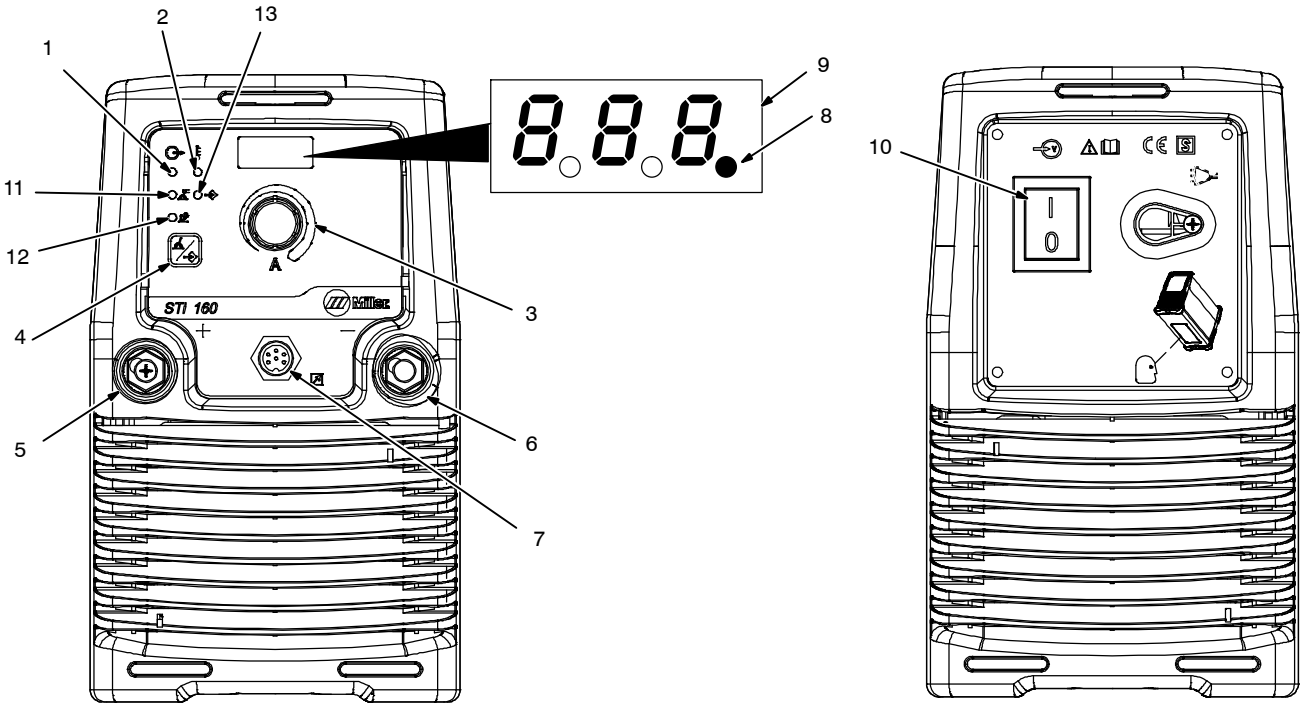

956142809_3-6_D

Weld output terminals are energized when power is On, and Ready Light is lit.

1 Ready Light (LED)

Light comes on approximately two seconds after power switch is placed in On (I) position. The light indicates that the unit is energized and ready for welding.

2 High Temperature Light (LED)

Light comes on if unit overheats. Welding can resume when unit has cooled (see Section 4-3).

3 Amperage/Set-Up Adjustment Control

Use control to adjust welding amperage and change values while in the set-up mode.

4 Process/Set-Up Selector Switch

See Section 5-5 and/or 5-6

5 Positive Weld Output Receptacle

For Stick welding, connect electrode cable to this receptacle. For TIG welding, connect work cable to this receptacle.

6 Negative Weld Output Receptacle

For Stick welding, connect work cable to this receptacle. For TIG welding, connect torch to this receptacle.

7 Remote Control Receptacle

Connect remote control to receptacle (see Section 4-4). For TIG and Stick welding, output may be adjusted from min to max of the front panel setting with the remote control.

8 Remote Control Pixel

Pixel flashes when a remote control is connected to the remote control receptacle.

☞ *When a foot or finger remote control is connected , remote trigger is not enabled. Only amperage adjustment is controlled by the remote control and by the Amperage/ Set-up Adjustment control.*

9 Ammeter And Parameter Display (Meter)

Meter displays actual amperage while welding. Meter also displays preset parameters for any of the following: time, set-up, and overheating alarm.

10 Power Switch

Place switch in On (I) position to turn unit on. Place switch in Off (0) position to turn unit off. Upon power up, unit will recall and display the last welding procedure, or factory default procedure (see Section 5-7).

11 Stick Welding Light (LED)

See Section 5-5).

12 TIG Lift Arc Start Light (LED)

See Section 5-6).

13 Set-Up Light (LED)

5-5. Preparing Unit For Stick Welding (STi Model)

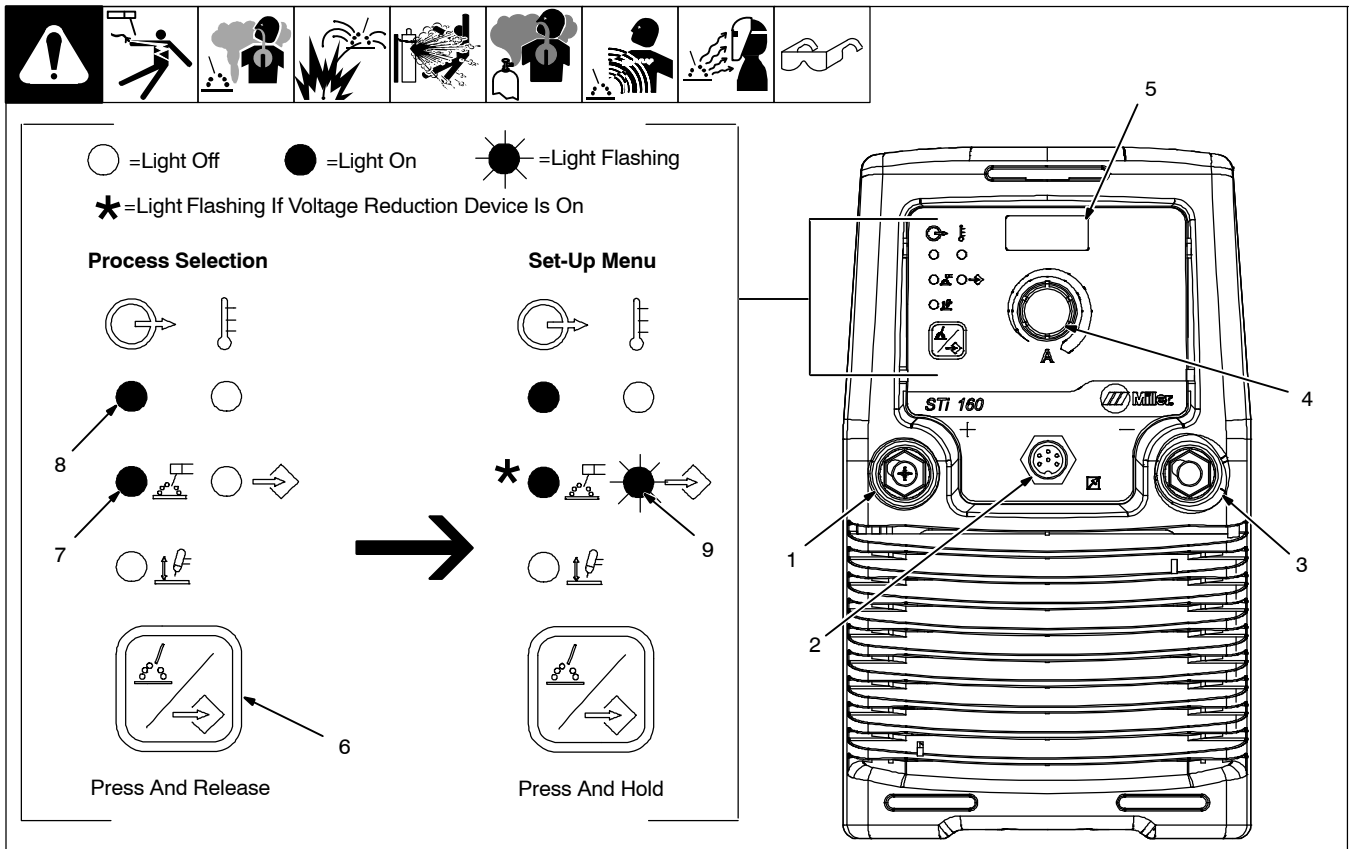

Weld output terminals are energized when power is On, and Ready Light is lit.

1 Positive Weld Output Terminal
2 Remote Control Receptacle
3 Negative Weld Output Terminal
4 Amperage/Set-Up Adjustment Control
5 Ammeter And Parameter Display (Meter)
6 Process/Set-Up Selector Switch
7 Stick Welding Light (LED)
8 Ready Light (LED)
9 Set-Up Light (LED)

Prepare unit for Stick welding as follows:

Connect electrode holder to positive weld output receptacle.

Connect work clamp to negative weld output terminal.

If desired, connect an optional remote control to the remote control receptacle to remotely control weld amperage.

Turn power on. Allow time for unit to complete its start up cycle.

Press and release Amperage/Set-Up Adjustment control to select Stick welding and light corresponding LED. Display meter displays ARC for three seconds and then the factory default setting of 80 amperes.

Voltage Reduction Setting

To change voltage reduction setting, proceed as follows:

Press and hold Process/Set-Up Adjustment Control to enter set-up mode.

Upon entry, the Set-Up light begins to flash, and the display meter displays VRD.

Voltage Reduction default is Off. Use Amperage/Set-Up Adjustment control to enable or turn setting On.

When Voltage Reduction is enabled, Stick Welding light flashes continuously. VRD is set to 20 volts

☞ *Unit will automatically exit the set-up menu if no activity is detected for more than three seconds. Press and hold Process/Set-Up Adjustment control to re-enter set-up mode.*

Hot Start Setting

Use Hot Start to increase output amperage at the start of a weld to help prevent electrode sticking.

To change Hot Start setting, proceed as follows:

While in the set-up menu, press and release Process/Set-Up Selector switch. The Set-Up light will continue to flash.

The display meter will display HS.

Use the Amperage/Set-Up Adjustment control to change amperage from 0 to 50 percent of the preset amperage value, with 15 percent being the default value. The maximum Hot Start amperage value is 150 amps.

Example: If preset amperage is 90 amps, 0% = 90 amps, 50% = 135 amps.

Arc Force Setting:

Use Arc Force to increase short-circuit amperage at low arc voltage. Set at 0 for normal welding amperage. Turn control clockwise to increase short-circuit amperage.

To change Arc Force setting, proceed as follows:

While in the set-up menu, press and release the Process/Set-Up Selector switch. The Set-Up light continues to flash.

Use the Amperage/Set-Up Adjustment control to change amperage from 0 to 50 percent of the preset amperage value, with 15 percent being the default value. The maximum Arc Force setting is 150 amps.

Example: If preset amperage is 90 amps, 0% = 90 amps, 50% = 135 amps.

Anti Stick

Anti Stick prevents the electrode from sticking while welding.

This function is automatically active while using the Stick welding process. Anti Stick increases amperage when arc voltage is below ten volts for more than two seconds.

☞ *The amperage range while Stick welding is from 4 to 150 amps.*

5-6. Preparing Unit For TIG Welding (STi Model)

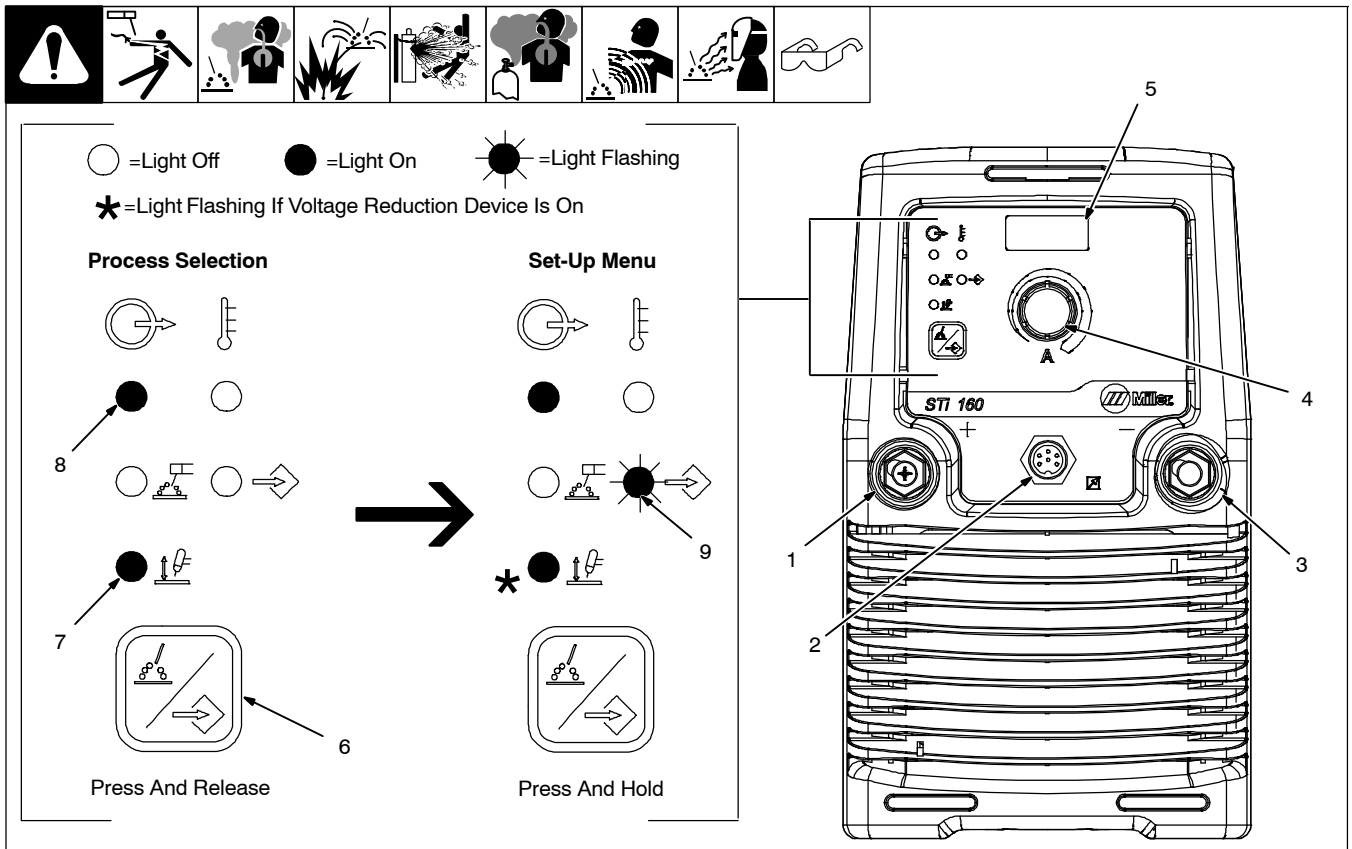

Weld output terminals are energized when power is On, and Ready Light is lit.

1 Positive Weld Output Terminal
2 Remote Control Receptacle
3 Negative Weld Output Terminal
4 Amperage/Set-Up Adjustment Control
5 Ammeter And Parameter Display (Meter)
6 Process/Set-Up Selector Switch
7 TIG Welding Light (LED)
8 Ready Light (LED)
9 Set-Up Light (LED)

Prepare unit for TIG welding as follows:

Connect electrode holder to negative weld output receptacle.

Connect work clamp to positive weld output terminal.

If desired, connect a remote control to the remote control receptacle.

Turn power on. Allow time for unit to complete its start up cycle.

Press and release Amperage/Set-Up Adjustment control to select TIG welding and light corresponding LED. Display meter displays TIG for three seconds and then the factory default setting of 50 amperes.

Voltage Reduction Setting

To change voltage reduction setting, proceed as follows:

Press and hold Amperage/Set-Up Adjustment Control to enter set-up mode.

Upon entry, the Set-Up light begins to flash, and the display meter displays VRD.

Voltage Reduction default is Off. Use Amperage/Set-Up Adjustment control to enable or turn setting On.

When Voltage Reduction is enabled, TIG Welding light flashes continuously. VRD is set to 20 volts.

☞ *Unit will automatically exit the set-up menu if no activity is detected for more than three seconds. Press and hold Amperage/Set-Up Adjustment control to re-enter set-up mode.*

Slope Down Setting

To change Slope Down setting, proceed as follows:

While in the set-up menu, press and release the Process/Set-Up Selector switch. The Set-up light continues to flash.

The display meter will display SL.

Use the Amperage/Set-Up Adjustment control to reduce amperage over a set period of time (0–10 seconds) at the end of the weld. The default setting is 0 seconds.

Application:

Slope Down should be used while TIG welding materials that are crack sensitive, and/or the operator wants to eliminate the crater at the end of the weld.

Anti Stick

Anti Stick prevents the electrode from sticking while welding.

This function is automatically active while using the TIG welding process. Anti Stick increases amperage when arc voltage is below four volts for more than two seconds.

☞ *The amperage range while TIG welding is from 4 to 160 amps.*

5-7. Resetting Unit To Factory Default Settings (STi Model Only)

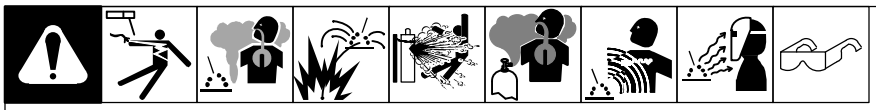

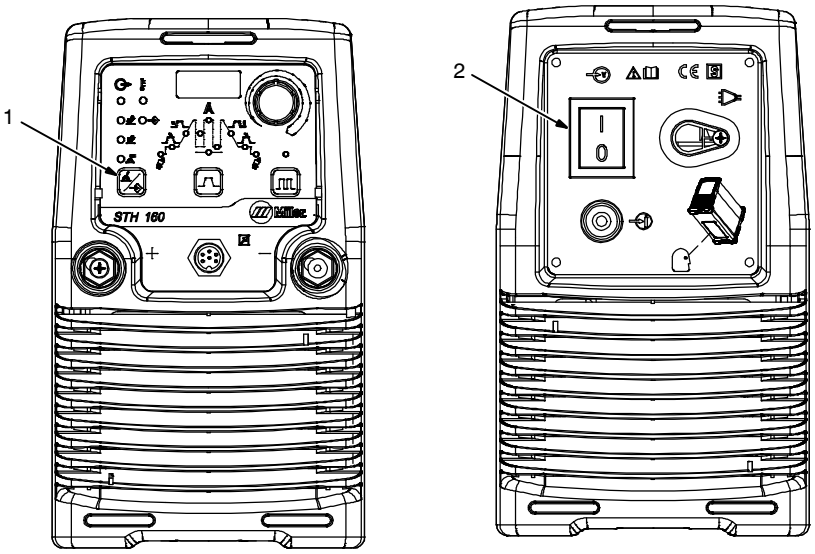

☞ *This procedure will delete all operator specified parameters, and recall all factory parameters.*

1 Process/Set-up Switch

2 Power Switch

Turn unit off. Turn unit on while pressing and holding Process/Set-up switch; wait for a beep signal (about two seconds). Factory default settings are now restored.

956142809_3-6_D

5-8. Lift-Arc™ And HF TIG Start Procedures

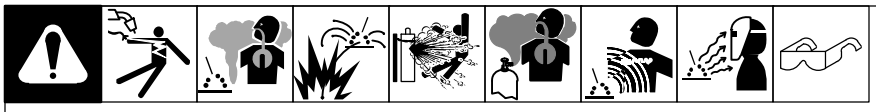

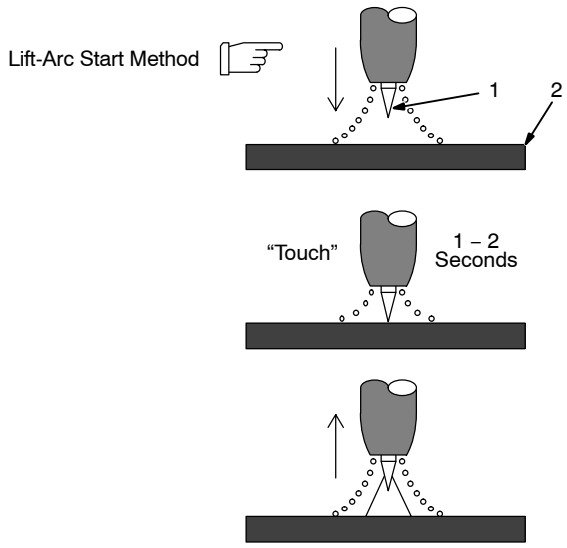

Lift-Arc Start

When Lift-Arc button light is On, start arc as follows:

1 TIG Electrode

2 Workpiece

Touch tungsten electrode to workpiece at weld start point, enable output and shielding gas with torch trigger, foot control, or hand control. **Hold electrode to workpiece for 1-2 seconds**, and slowly lift electrode. Arc is formed when electrode is lifted.

Normal open-circuit voltage is not present before tungsten electrode touches workpiece; only a low sensing voltage is present between electrode and workpiece. The solid-state output contactor does not energize until after electrode is touching workpiece. This allows electrode to touch workpiece without overheating, sticking, or getting contaminated.

Application:

Lift-Arc is used for the DCEN or AC GTAW process when HF Start method is not permitted, or to replace the scratch method.

HF Start

When HF Start button light is On, start arc as follows:

High frequency turns on to help start arc when output is enabled. High frequency turns off when arc is started, and turns on whenever arc is broken to help restart arc.

Application:

HF start is used for the DCEN GTAW process when a non-contact arc starting method is required.

SECTION 6 – MAINTENANCE AND TROUBLESHOOTING

6-1. Routine Maintenance

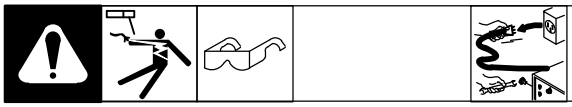

Disconnect power before maintaining.

Maintain more often during severe conditions.

	✓ = Check ◇ = Change ● = Clean Δ = Repair ☆ = Replace * To be done by Factory Authorized Service Agent
Every 3 Months	✓☆ Labels ✓ ☆ Gas Hoses 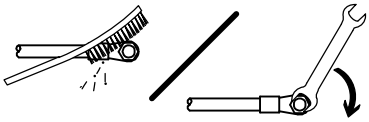 ● Weld Terminals
Every 3 Months	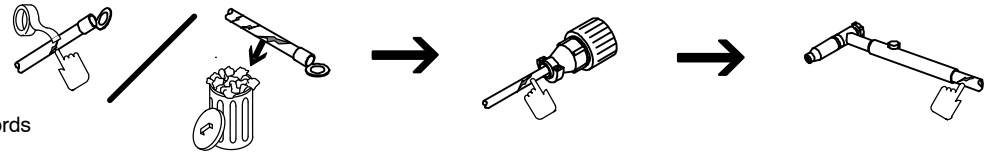 ✓Δ ☆Cables And Cords
Every 6 Months	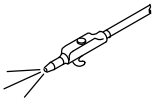 **Do not remove case when blowing out inside of unit.** Blow out inside. Direct airflow through front and back louvers. ●:During heavy service, clean monthly.

6-2. High Temperature Help Display

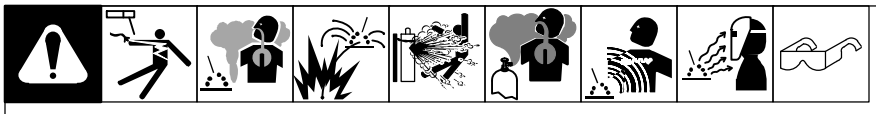

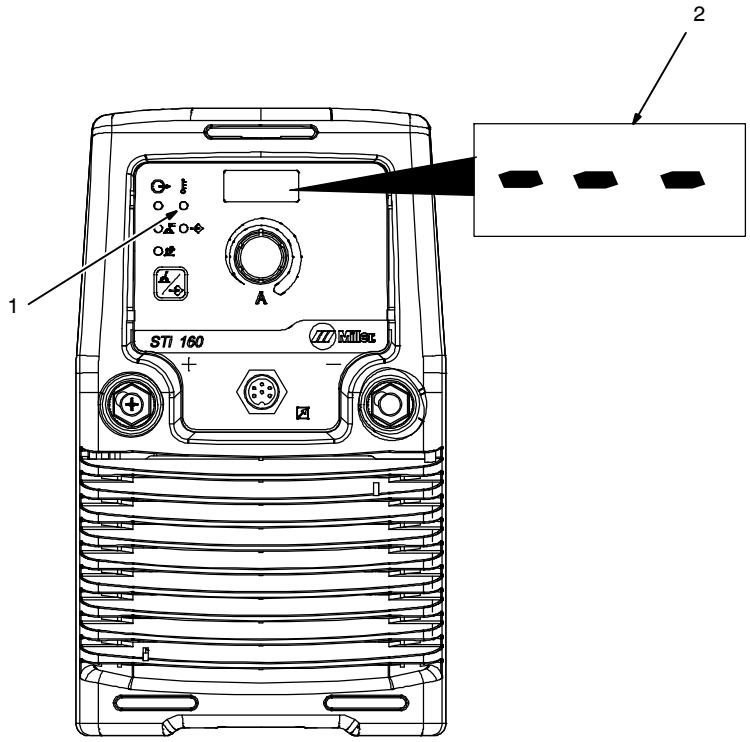

1 High Temperature Light (LED)

2 Meter Help Display

When unit over heats, High Temperature light turns on and unit emits an audible beep. The meter displays three dashes as shown. Unit shuts down and fans run until temperature drops within normal operating range (see Section 4-3).

***NOTICE** – Wait at least four minutes before checking to see if temperature is within normal operating range.*

956142809_3-6_D

6-3. Troubleshooting

Trouble	Remedy
No weld output; unit completely inoperative; ready light (LED) Off.	Place line disconnect switch in On position (see Section 4-8).
	Check and replace line fuse(s), if necessary, or reset circuit breaker (see Section 4-8).
	Check for proper input power connections (see Sections 4-7 and 4-8).
No weld output; high temperature light (LED) On.	Unit overheated causing thermal shutdown. Allow unit to cool with fan On (see Section 4-3).
	Reduce duty cycle or amperage (see Section 4-3).
	Check and correct blocked/poor airflow to unit (see Section 4-1).
Erratic or improper welding arc or output.	Use proper size and type of weld cable (see your Distributor).
	Clean and tighten weld connections.
	Check electrode polarity and reverse if necessary; check and correct poor connections to workpiece.
Fan not operating.	Unit not warmed up enough to require fan cooling.
	Check for and remove anything blocking fan movement.
	Have Factory Authorized Service Agent check fan motor and control circuitry.
Stick welding problems: Hard starts; poor welding characteristics; unusual spattering.	Use proper type and size of electrode.
	Check electrode polarity and reverse if necessary; check and correct poor connections.
	Make sure a remote control is not connected.
TIG welding problems: Wandering arc; hard starts; poor welding characteristics; spattering problems.	Use proper type and size of tungsten.
	Use properly prepared tungsten.
	Check electrode polarity and reverse if necessary.
TIG welding problems: Tungsten electrode oxidizing and not remaining bright after welding.	Shield weld zone from drafts.
	Check for correct type shielding gas.
	Check and tighten gas fittings.
	Check electrode polarity and reverse if necessary.

Notes

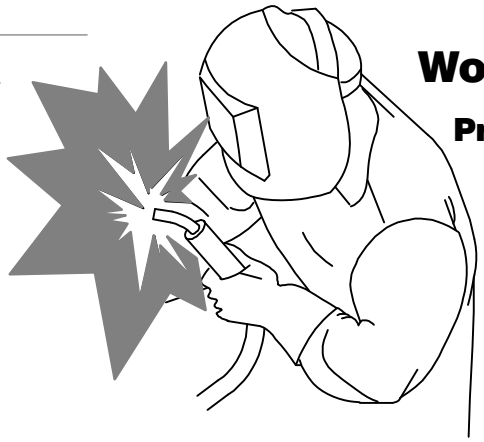

Work like a Pro!

Pros weld and cut safely. Read the safety rules at the beginning of this manual.

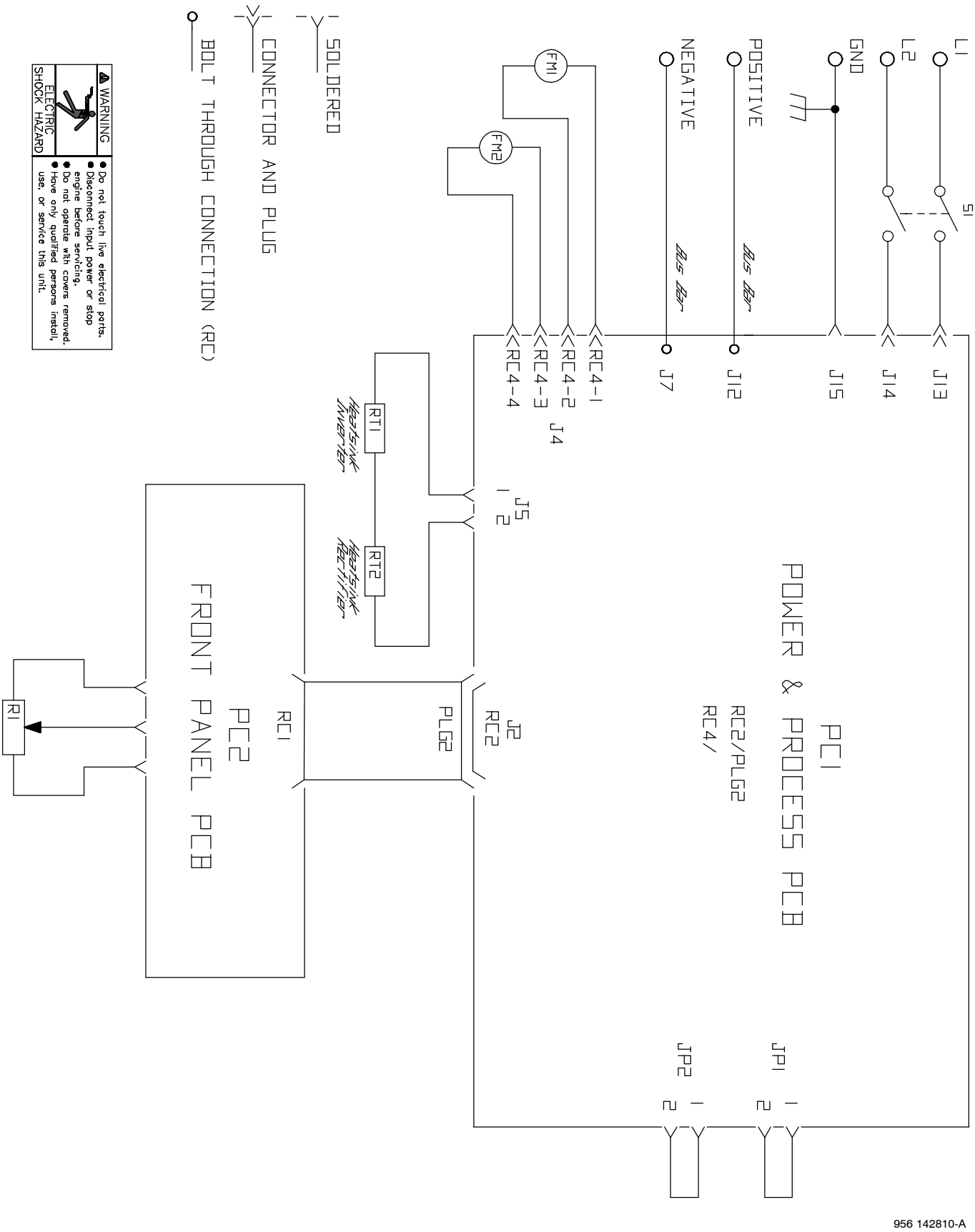

956 142810-A

Figure 7-1. Circuit Diagram For Si 160

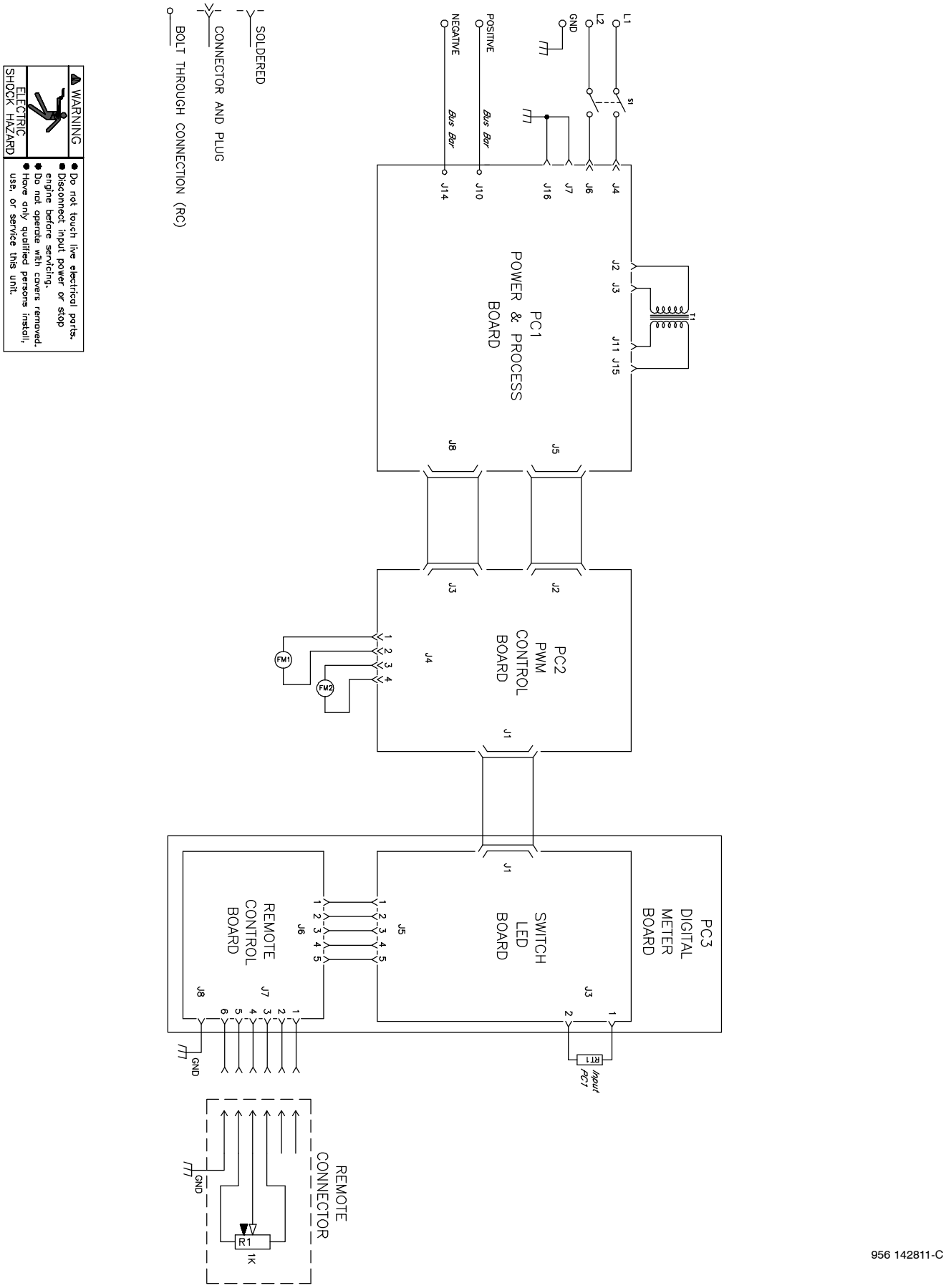

956 142811-C

Figure 7-2. Circuit Diagram For STi 160

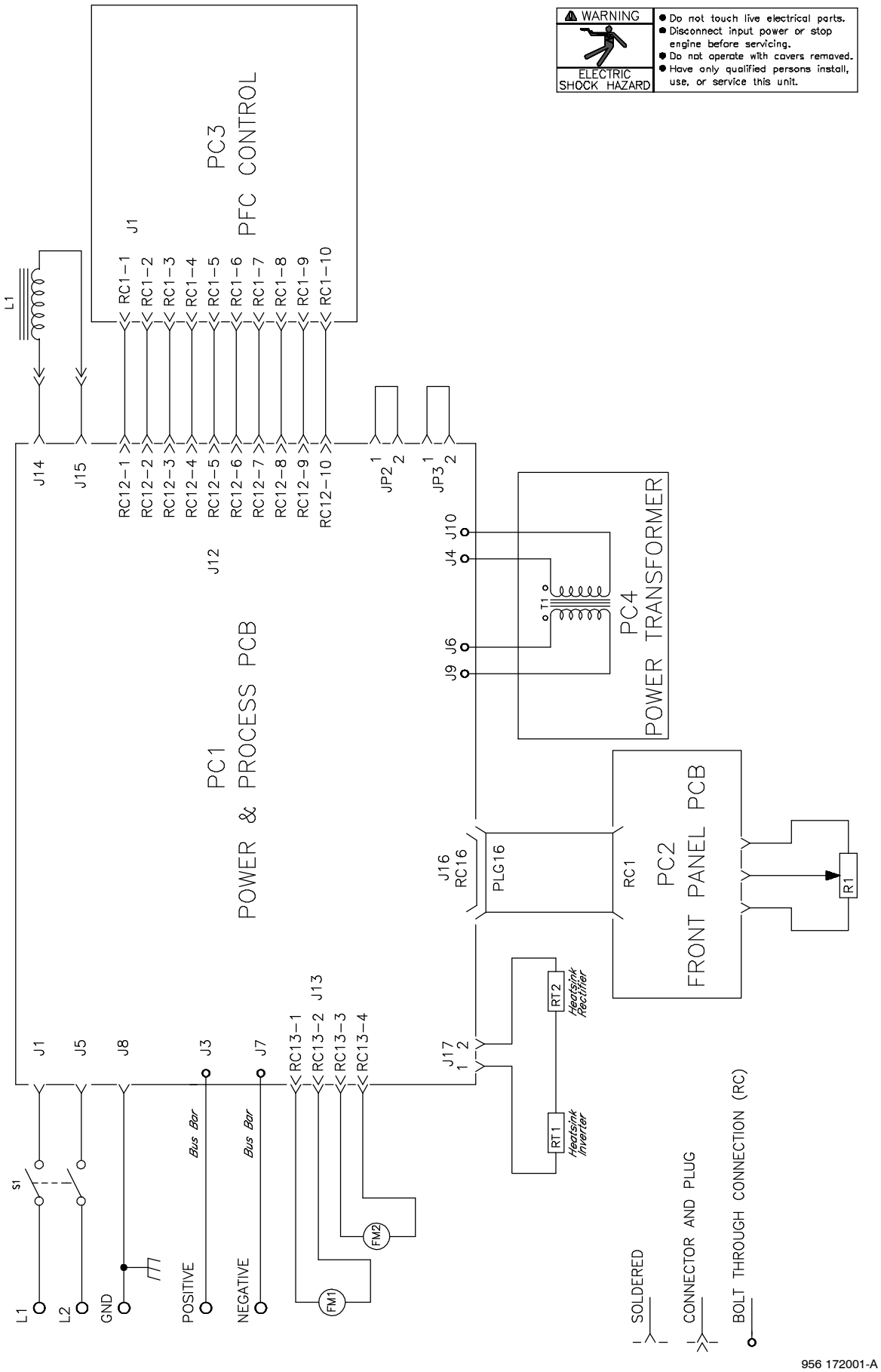

Figure 7-3. Circuit Diagram For Si 160 PFC

Warranty Questions?

Call your ITW Welding Regional Office.

TRUE BLUE® WARRANTY

Effective January 1, 2021
(Equipment with a serial number preface of NB or newer)

This limited warranty supersedes all previous Miller warranties and is exclusive with no other guarantees or warranties expressed or implied.

LIMITED WARRANTY – Subject to the terms and conditions below, Miller Electric Mfg. LLC, Appleton, Wisconsin and ITW Welding (hereafter referred to as Miller) warrant to authorized distributors that new Miller equipment sold after the effective date of this limited warranty is free of defects in material and workmanship at the time it is shipped by Miller. THIS WARRANTY IS EXPRESSLY IN LIEU OF ALL OTHER WARRANTIES, EXPRESS OR IMPLIED, INCLUDING THE WARRANTIES OF MERCHANTABILITY AND FITNESS.

Within the warranty periods listed below, Miller will repair or replace any warranted parts or components that fail due to such defects in material or workmanship. Miller must be notified in writing within thirty (30) days of such defect or failure, at which time Miller will provide instructions on the warranty claim procedures to be followed. Notifications submitted as online warranty claims must provide detailed descriptions of the fault and troubleshooting steps taken to diagnose failed parts. Warranty claims that lack the required information as defined in the Miller Service Operation Guide (SOG) may be denied by Miller.

Miller shall honor warranty claims on warranted equipment listed below in the event of a defect within the warranty coverage time periods listed below. Warranty time periods start on the delivery date of the equipment to the end-user purchaser, or 18 months after the equipment is shipped to an International distributor, whichever occurs first.

1. 5 Years Parts — 3 Years Labor
   * Original Main Power Rectifiers Only to Include SCRs, Diodes, and Discrete Rectifier Modules
2. 3 Years — Parts and Labor Unless Specified
   * Auto-Darkening Helmet Lenses (No Labor
   * Engine Driven Welder/Generators **(NOTE: Engines are Warranted Separately by the Engine Manufacturer.)**
   * Insight Welding Intelligence Products (Except External Sensors)
   * Inverter Power Sources
   * Plasma Arc Cutting Power Sources
   * Process Controllers
   * Semi-Automatic and Automatic Wire Feeders
   * Transformer/Rectifier Power Sources
3. 2 Years — Parts and Labor
   * Auto-Darkening Weld Masks (No Labor)
   * Fume Extractors – Capture 5, Filtair 400 and Industrial Collector Series
4. 1 Year — Parts and Labor Unless Specified
   * ArcReach Heater
   * AugmentedArc and LiveArc Welding Systems
   * Automatic Motion Devices
   * Bernard BTB Air-Cooled MIG Guns (No Labor)
   * CoolBelt (No Labor)
   * Desiccant Air Dryer System
   * Field Options **(NOTE: Field options are covered for the remaining warranty period of the product they are installed in, or for a minimum of one year — whichever is greater.)**
   * RFCS Foot Controls (Except RFCS-RJ45)
   * Fume Extractors – Filtair 130, MWX and SWX Series, ZoneFlow Extraction Arms and Motor Control Box
   * HF Units
   * ICE/XT Plasma Cutting Torches (No Labor)
   * Induction Heating Power Sources, Coolers **(NOTE: Digital Recorders are Warranted Separately by the Manufacturer.)**
   * Load Banks
   * Motor-Driven Guns (except Spoolmate Spoolguns)
   * PAPR Blower Unit (No Labor)
   * Positioners and Controllers
   * Racks (For Housing Multiple Power Sources)
   * Running Gear/Trailers
   * Subarc Wire Drive Assemblies
   * Supplied Air Respirator (SAR) Boxes and Panels
   * TIG Torches (No Labor)
   * Tregaskiss Guns (No Labor)
   * Water Cooling Systems
   * Wireless Remote Foot/Hand Controls and Receivers
   * Work Stations/Weld Tables (No Labor)
5. 6 Months — Parts
   * 12 Volt Automotive-Style Batteries
6. 90 Days — Parts
   * Accessories (Kits)
   * ArcReach Heater Quick Wrap and Air Cooled Cables
   * Canvas Covers
   * Induction Heating Coils and Blankets, Cables, and Non-Electronic Controls
   * MDX Series MIG Guns
   * M-Guns
   * MIG Guns, Subarc (SAW) Torches, and External Cladding Heads
   * Remote Controls and RFCS-RJ45
   * Replacement Parts (No labor)
   * Spoolmate Spoolguns

Miller's True Blue® Limited Warranty shall not apply to:

1. **Consumable components; such as contact tips, cutting nozzles, contactors, brushes, relays, work station table tops and welding curtains, or parts that fail due to normal wear. (Exception: brushes and relays are covered on all engine-driven products.)**
2. Items furnished by Miller, but manufactured by others, such as engines or trade accessories. These items are covered by the manufacturer's warranty, if any.
3. Equipment that has been modified by any party other than Miller, or equipment that has been improperly installed, improperly operated or misused based upon industry standards, or equipment which has not had reasonable and necessary maintenance, or equipment which has been used for operation outside of the specifications for the equipment.
4. Defects caused by accident, unauthorized repair, or improper testing.

MILLER PRODUCTS ARE INTENDED FOR COMMERCIAL AND INDUSTRIAL USERS TRAINED AND EXPERIENCED IN THE USE AND MAINTENANCE OF WELDING EQUIPMENT.

The exclusive remedies for warranty claims are, at Miller's option, either: (1) repair; or (2) replacement; or, if approved in writing by Miller, (3) the pre-approved cost of repair or replacement at an authorized Miller service station; or (4) payment of or credit for the purchase price (less reasonable depreciation based upon use). Products may not be returned without Miller's written approval. Return shipment shall be at customer's risk and expense.

The above remedies are F.O.B. Appleton, WI, or Miller's authorized service facility. Transportation and freight are the customer's responsibility. TO THE EXTENT PERMITTED BY LAW, THE REMEDIES HEREIN ARE THE SOLE AND EXCLUSIVE REMEDIES REGARDLESS OF THE LEGAL THEORY. IN NO EVENT SHALL MILLER BE LIABLE FOR DIRECT, INDIRECT, SPECIAL, INCIDENTAL OR CONSEQUENTIAL DAMAGES (INCLUDING LOSS OF PROFIT) REGARDLESS OF THE LEGAL THEORY. ANY WARRANTY NOT PROVIDED HEREIN AND ANY IMPLIED WARRANTY, GUARANTY, OR REPRESENTATION, INCLUDING ANY IMPLIED WARRANTY OF MERCHANTABILITY OR FITNESS FOR PARTICULAR PURPOSE, ARE EXCLUDED AND DISCLAIMED BY MILLER.

This Limited Warranty provides specific legal rights, and other rights may be available, but may vary by country.

Miller®

Owner's Record

Please complete and retain with your personal records.

Model Name Serial/Style Number

Purchase Date (Date which equipment was delivered to original customer.)

Distributor

Address

Country Zip/Postal Code

For Service

Contact a DISTRIBUTOR or SERVICE AGENCY near you.

Always provide Model Name and Serial/Style Number.

Contact your Distributor for:

- Welding Supplies and Consumables
- Options and Accessories
- Service and Repair
- Replacement Parts
- Owner's Manuals

Contact the Delivering Carrier to:

File a claim for loss or damage during shipment.

For assistance in filing or settling claims, contact your distributor and/or equipment manufacturer's Transportation Department.

ITW Welding Products B.V.
Edisonstraat 10 3261 LD
Oud-Beijerland (NL)
Phone: +31 (0) 186 641 444
Fax: +31 (0) 186 640 880

ORIGINAL INSTRUCTIONS – PRINTED IN USA

© 2021 Miller Electric Mfg. LLC 2021–01